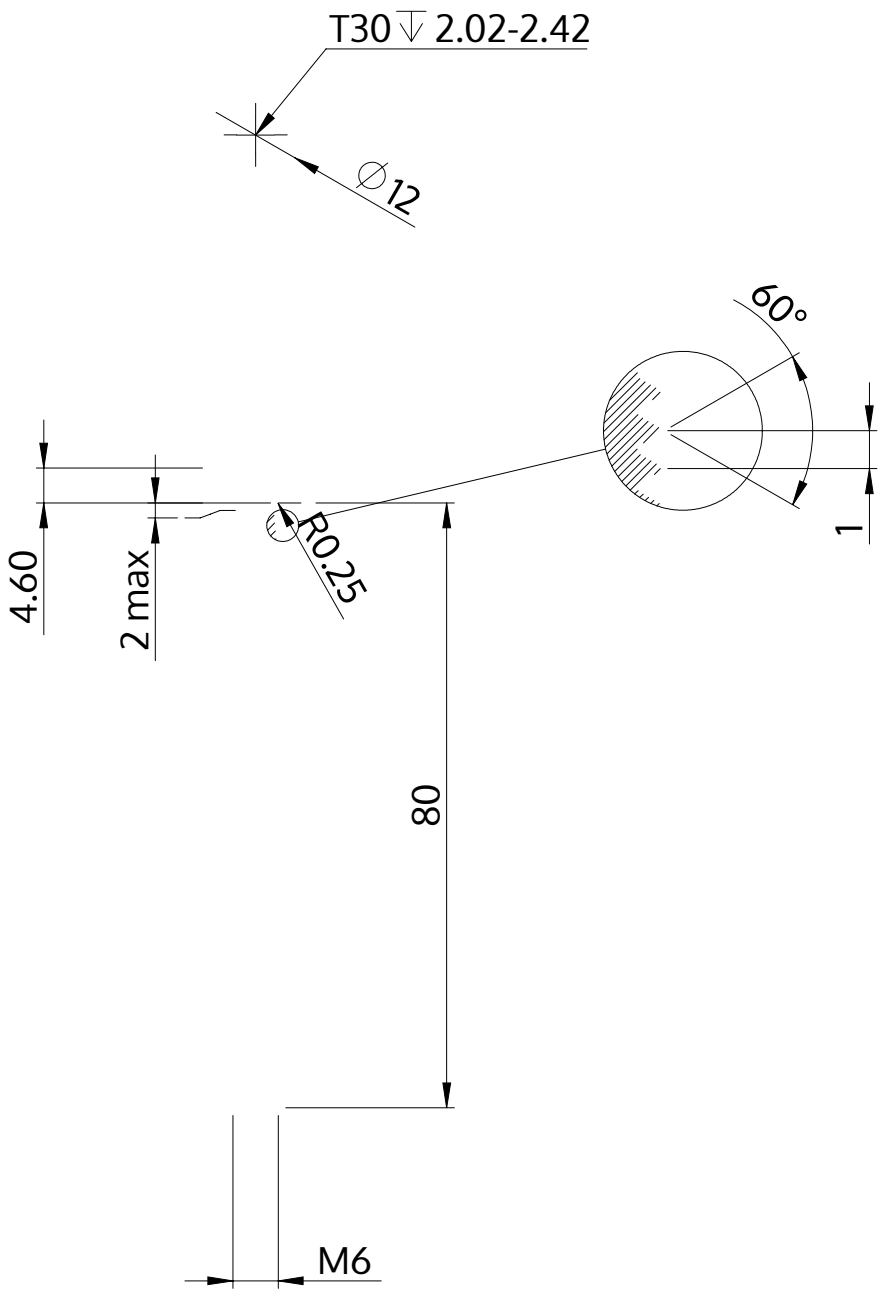

Description	STM39 6.0x80.0 - T30
Material	stainless-steel A2
Surface	bright, pickled and passivated
Weight	16.212 kg / 1000 pieces

SCREWERK	**STM390600800E**	
Metric Drawing A4	Scale 1:1	2024-10