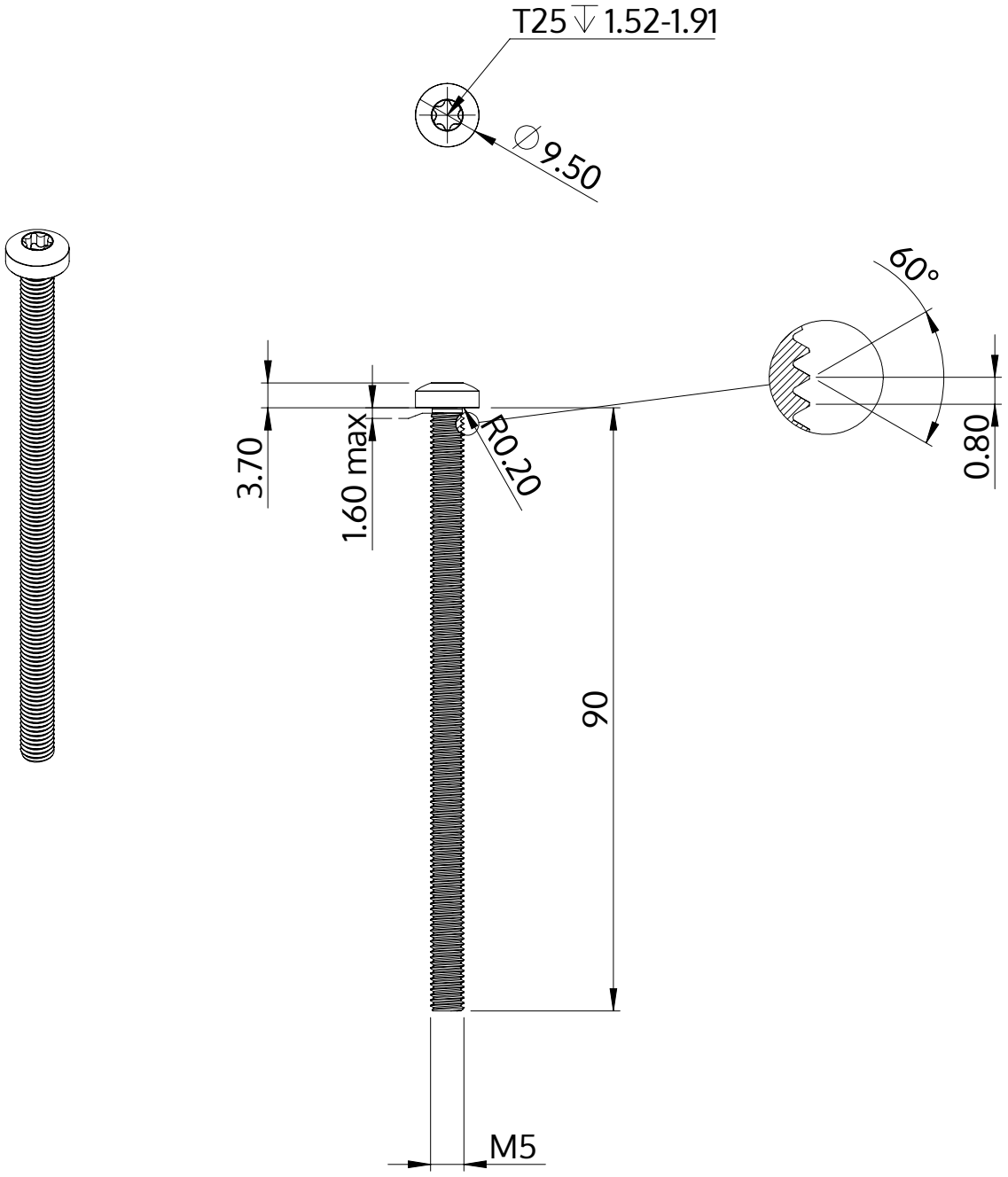

Description	STM39 5.0x90.0 - T25
Material	steel, hardened
Surface	zinc-plated 5-7 µm, baked, blue / transparent passivated
Weight	12.294 kg / 1000 pieces

SCREWERK	**STM390500900S**	
Metric Drawing A4	Scale 2:1	2024-10