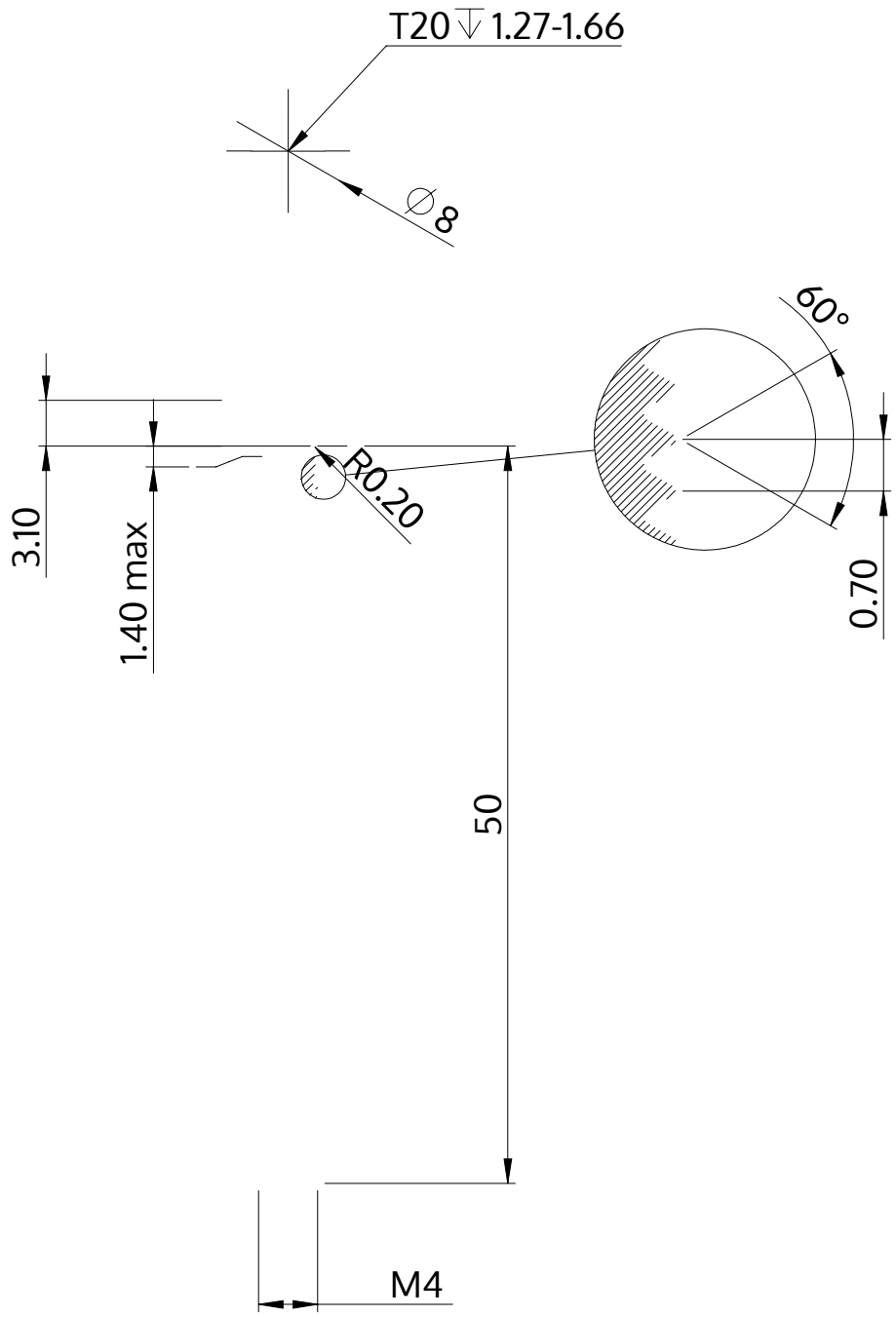

Description	STM39 4.0x50.0 - T20
Material	steel, hardened
Surface	zinc-plated 5-7 µm, baked, blue / transparent passivated
Weight	4.412 kg / 1000 pieces

SCREWERK	**STM390400500S**	
Metric Drawing A4	Scale 2:1	2024-10