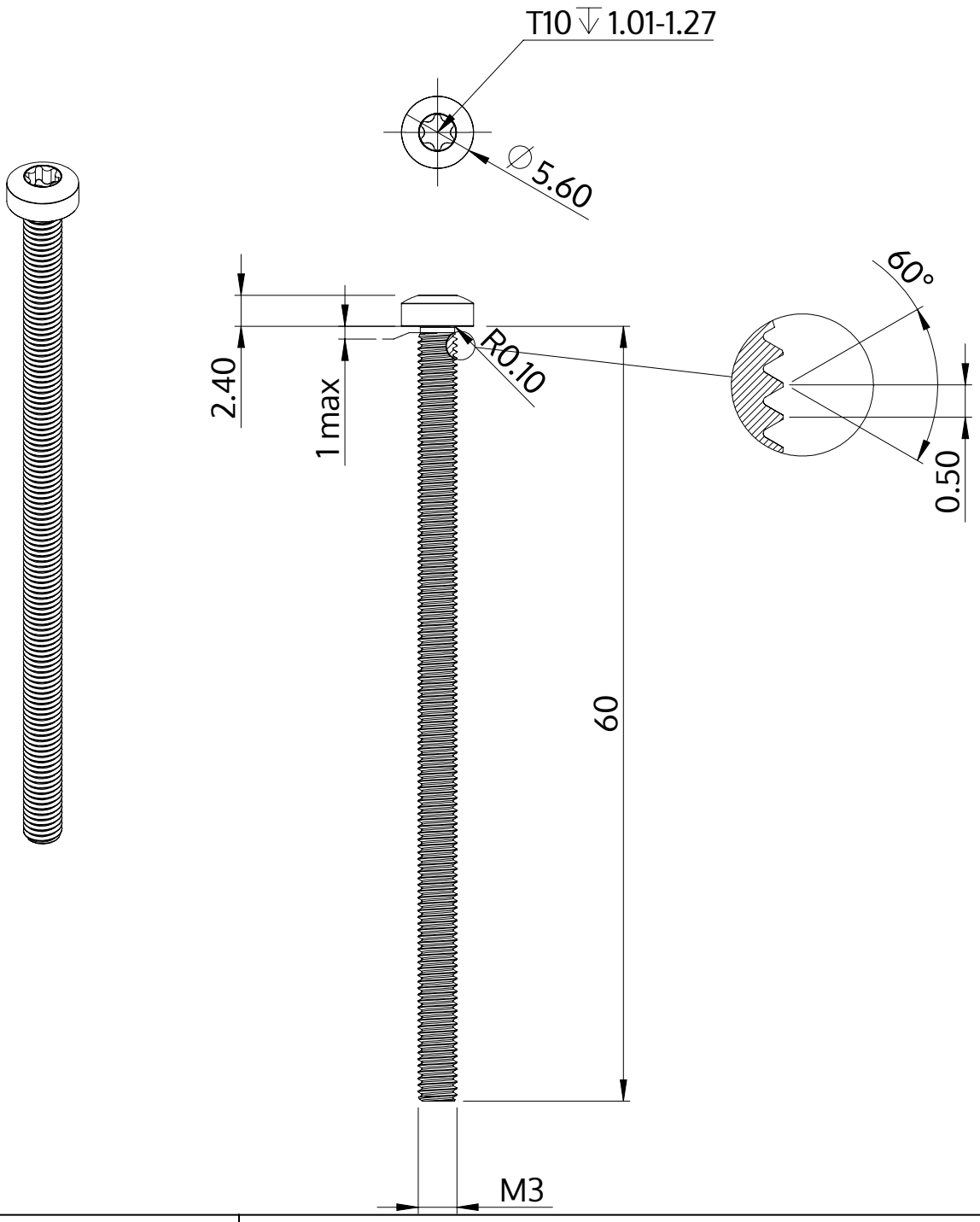

Description	STM39 3.0x60.0 - T10
Material	steel, hardened
Surface	zinc-plated 5-7 µm, baked, blue / transparent passivated
Weight	2.818 kg / 1000 pieces

SCREWERK	**STM390300600S**	
Metric Drawing A4	Scale None:1	2024-04