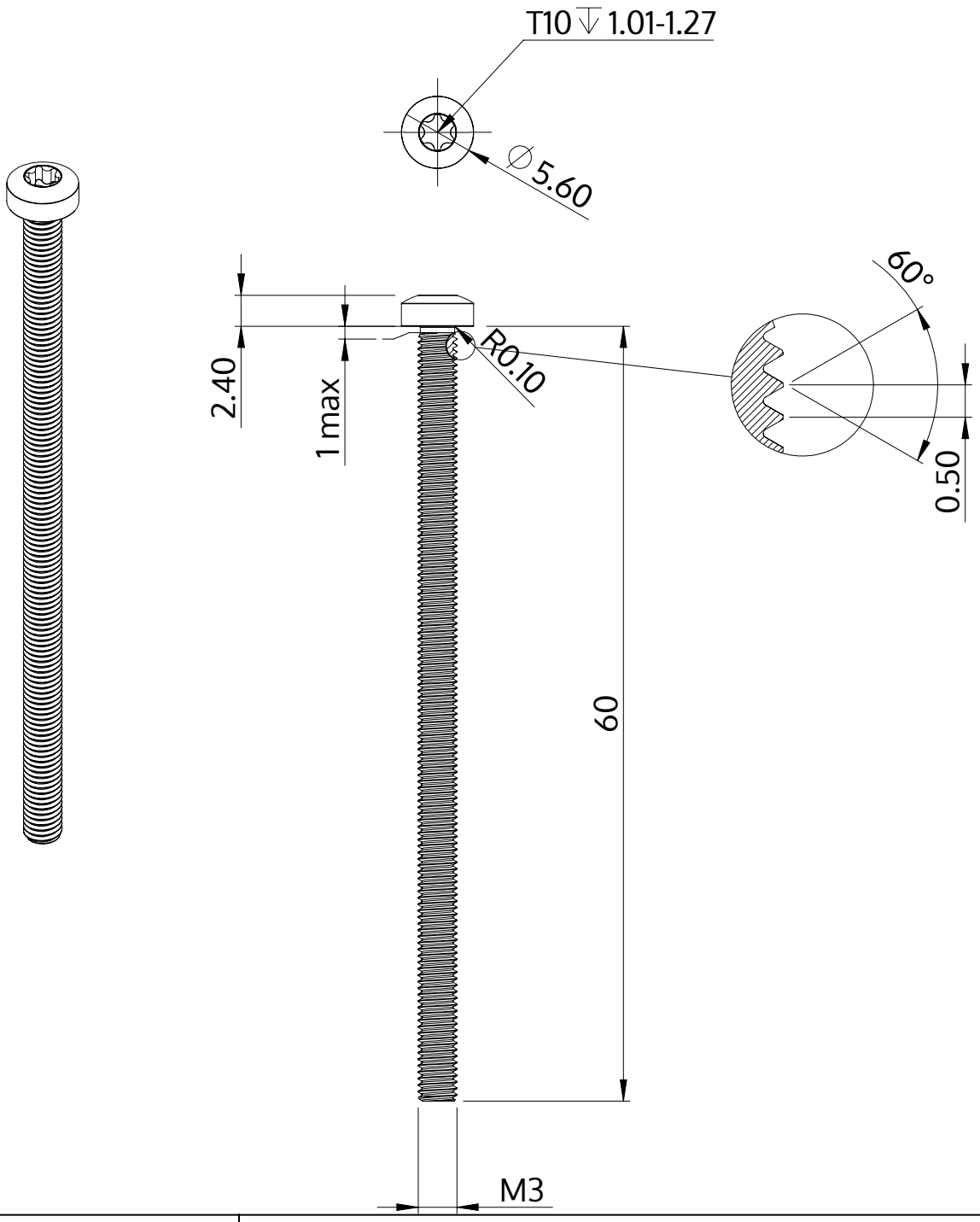

Description	STM39 3.0x60.0 - T10
Material	stainless-steel A2
Surface	bright, pickled and passivated
Weight	2.818 kg / 1000 pieces

SCREWERK	**STM390300600E**	
Metric Drawing A4	Scale 3:1	2024-10