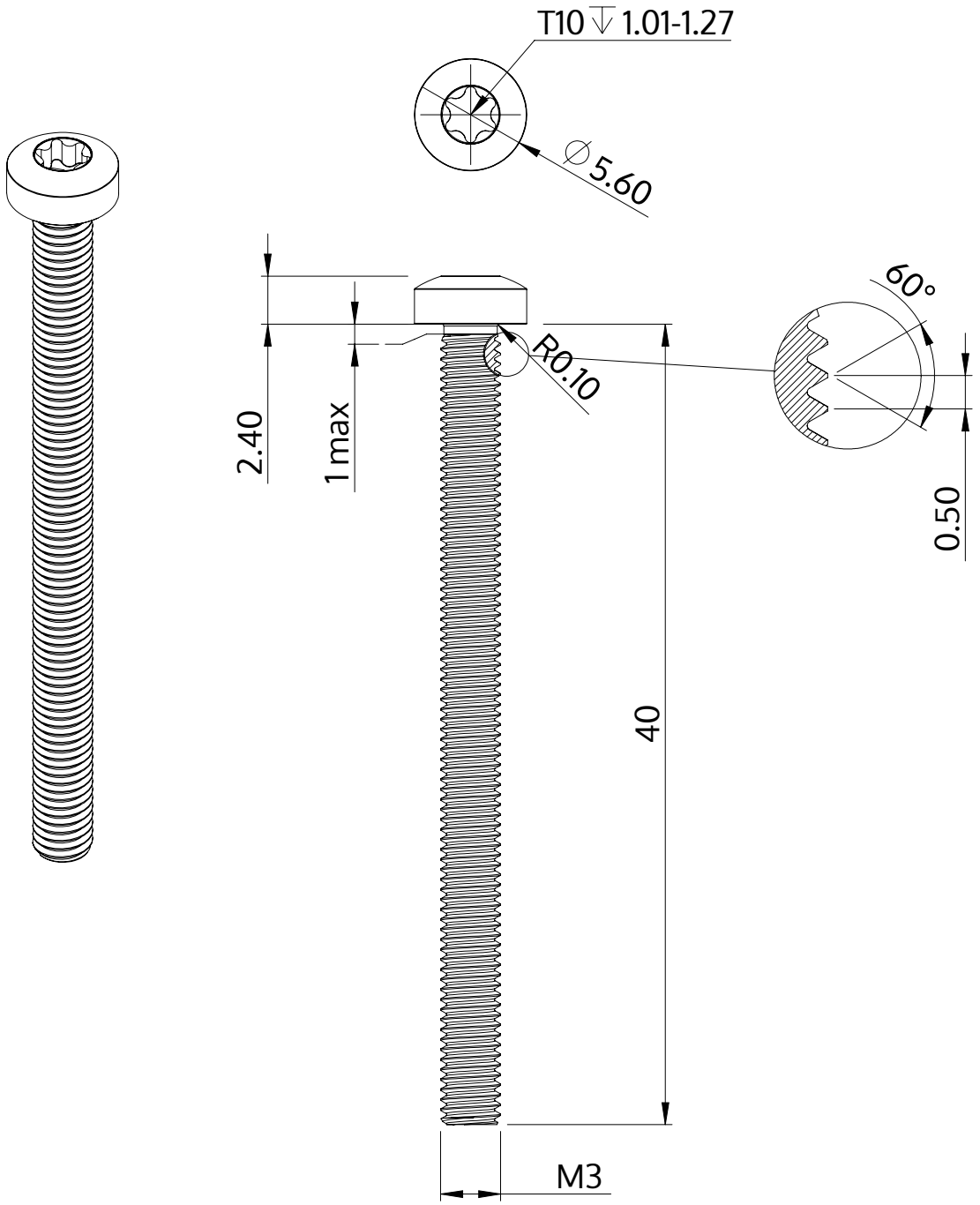

Description	STM39 3.0x40.0 - T10
Material	stainless-steel A2
Surface	bright, pickled and passivated
Weight	1.981 kg / 1000 pieces

SCREWERK	**STM390300400E**	
Metric Drawing A4	Scale 3:1	2024-10