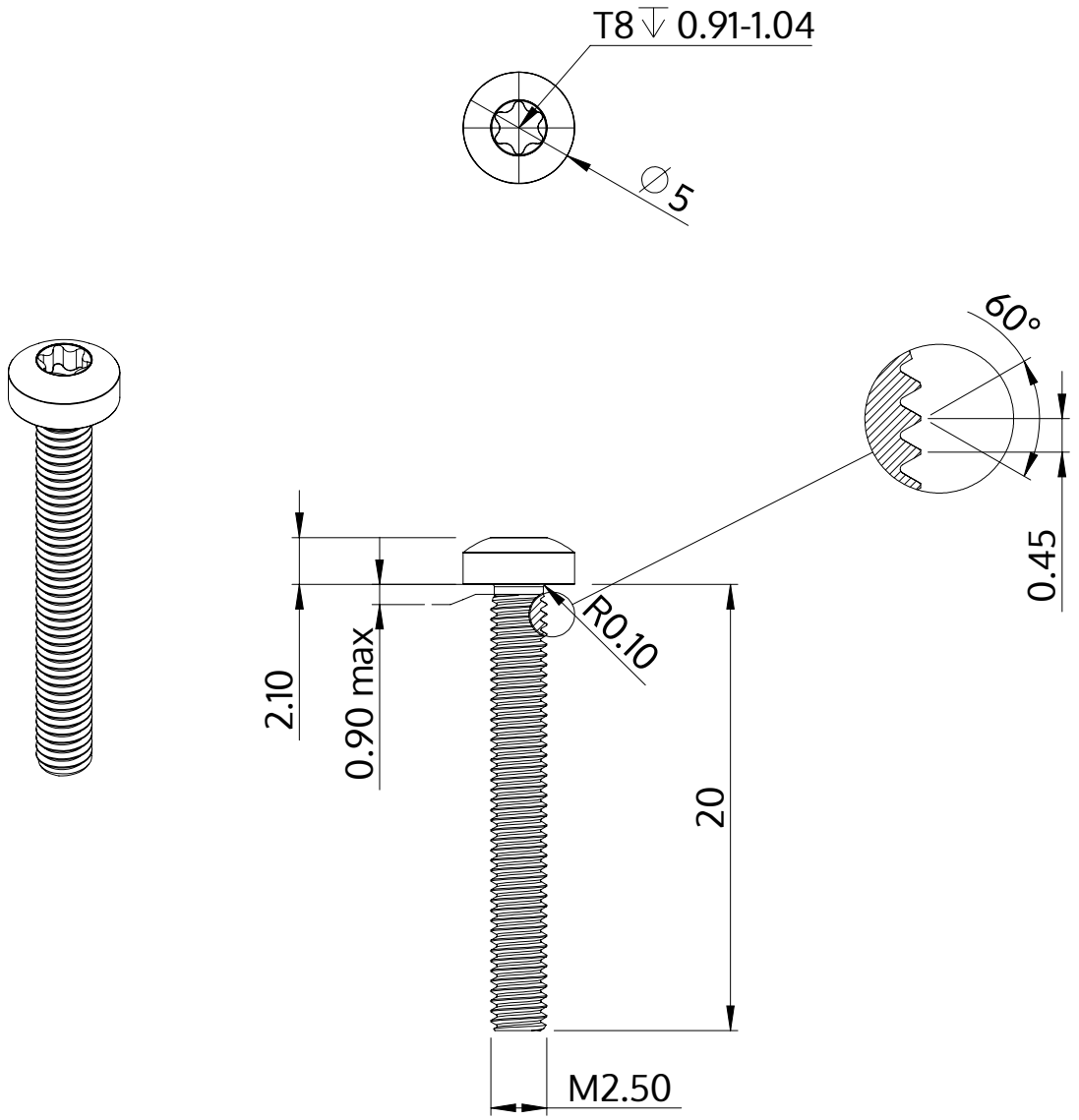

Description	STM39 2.5x20.0 - T8
Material	steel, hardened
Surface	Zinc-Nickel-plated min. 5µm, passivated black/ Cr-VI-free, baked, sealed
Weight	0.781 kg / 1000 pieces

SCREWERK	**STM390250200B**	
Metric Drawing A4	Scale None:1	2024-04