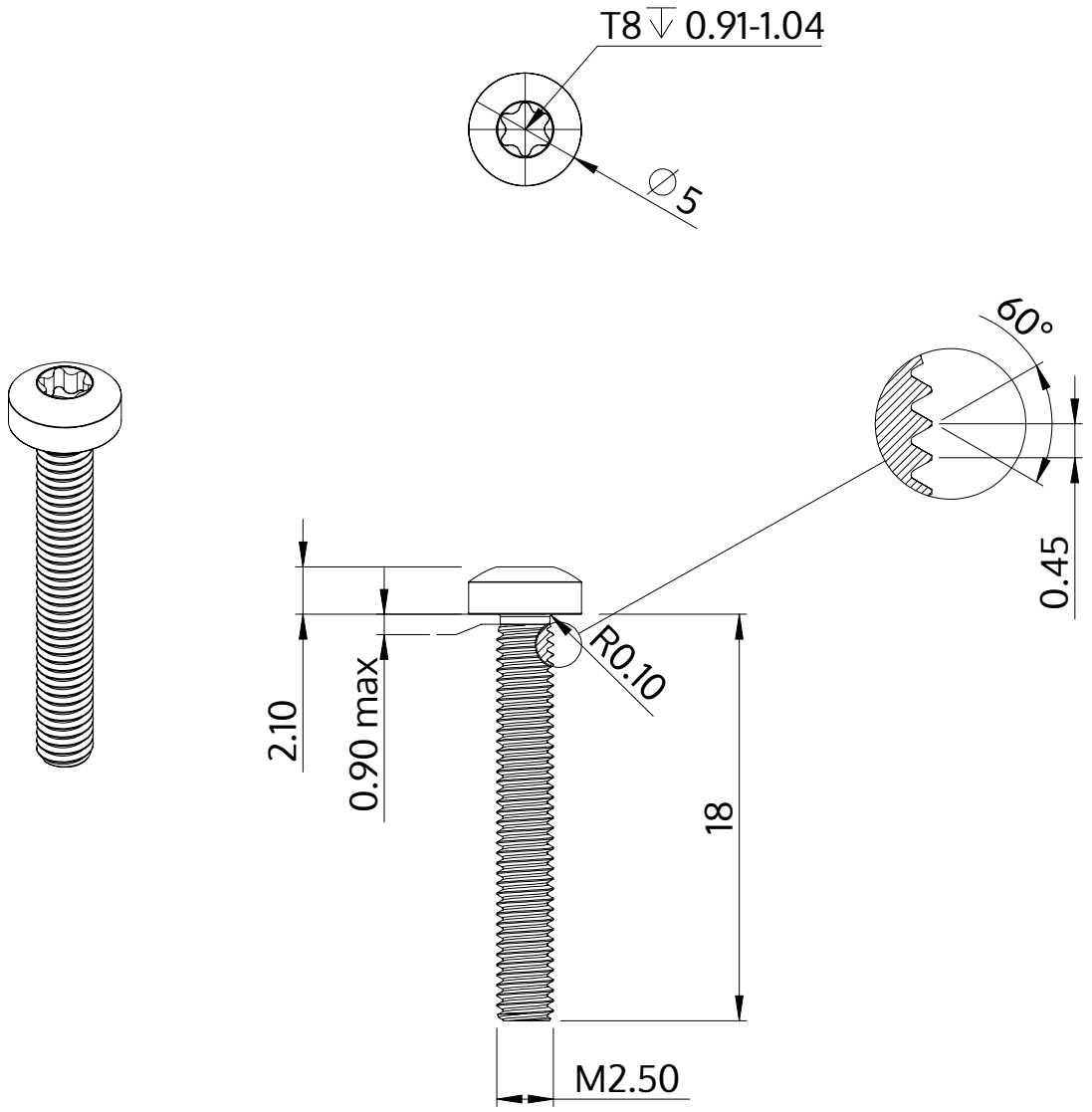

Description	STM39 2.5x18.0 - T8
Material	stainless-steel A2
Surface	bright, pickled and passivated
Weight	0.726 kg / 1000 pieces

SCREWERK	**STM390250180E**	
Metric Drawing A4	Scale None:1	2024-04