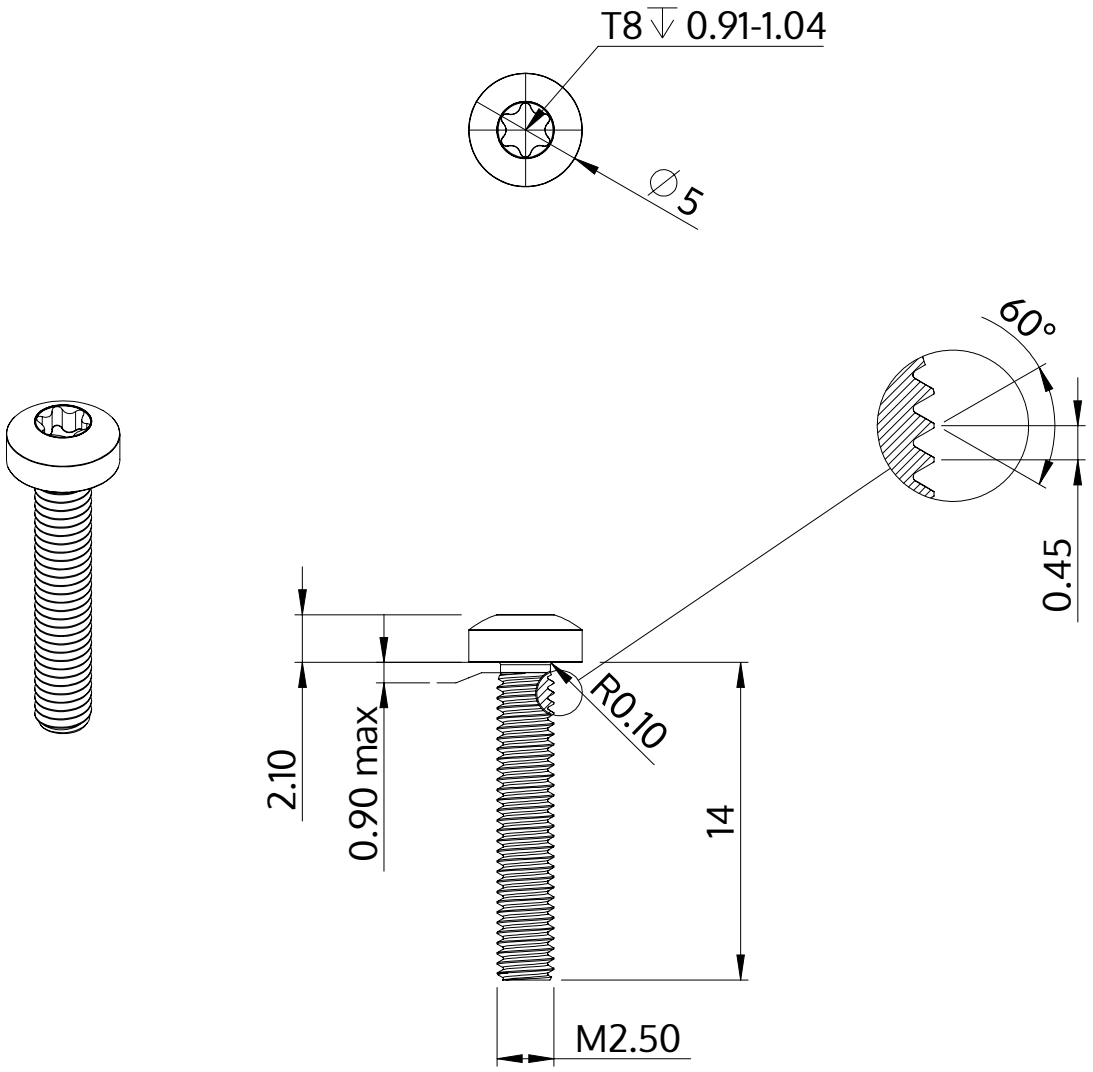

Description	STM39 2.5x14.0 - T8
Material	steel, hardened
Surface	zinc-plated 5-7 µm, baked, blue / transparent passivated
Weight	0.615 kg / 1000 pieces

SCREWERK	**STM390250140S**	
Metric Drawing A4	Scale None:1	2024-04