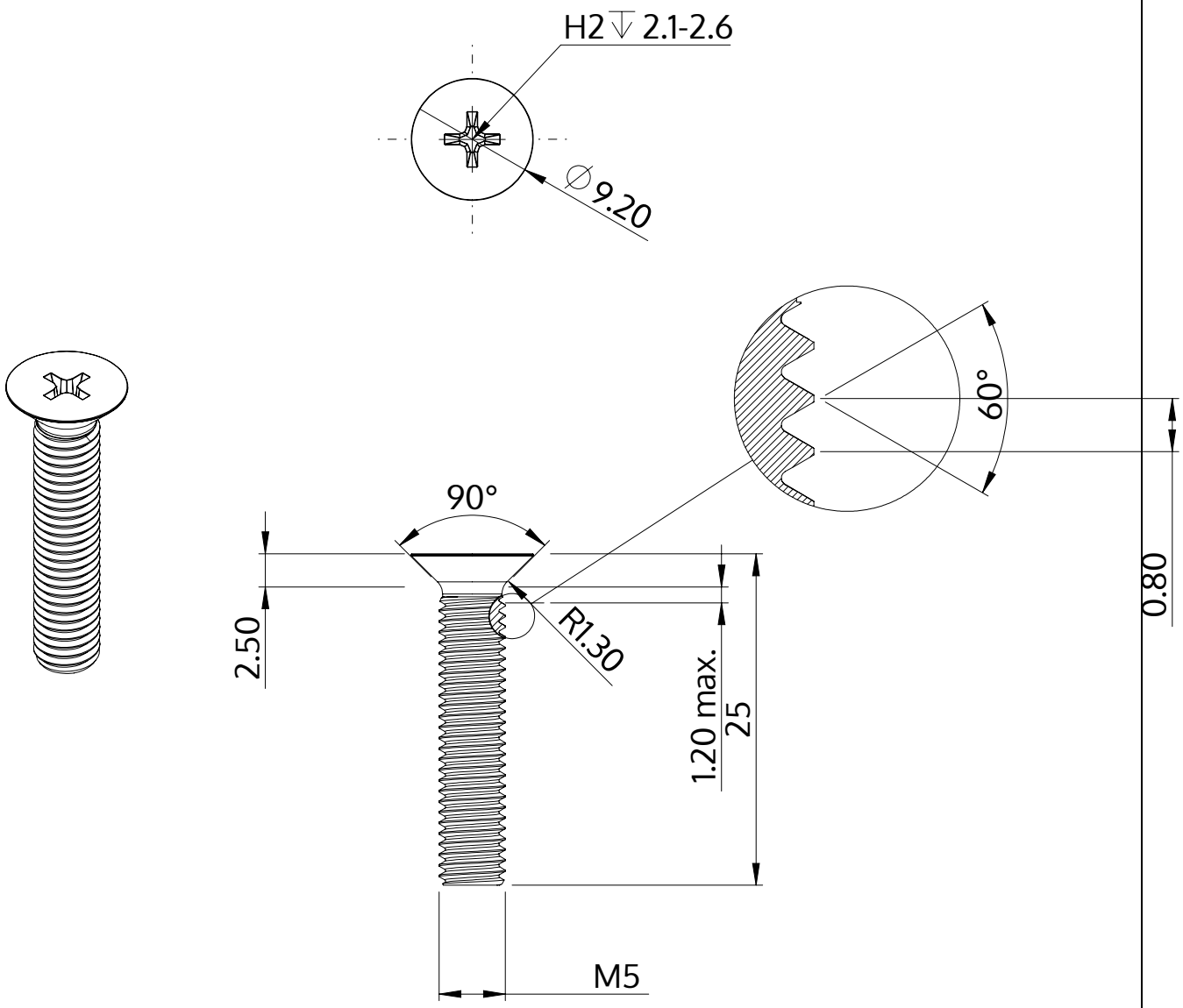

Description	STM33 5.0x25.0 - H2
Material	steel, hardened
Surface	zinc-plated 5-7 µm, baked, blue / transparent passivated
Weight	3.460 kg / 1000 pieces

SCREWERK	**STM330500250S**	
Metric Drawing A4	Scale 2:1	2024-10