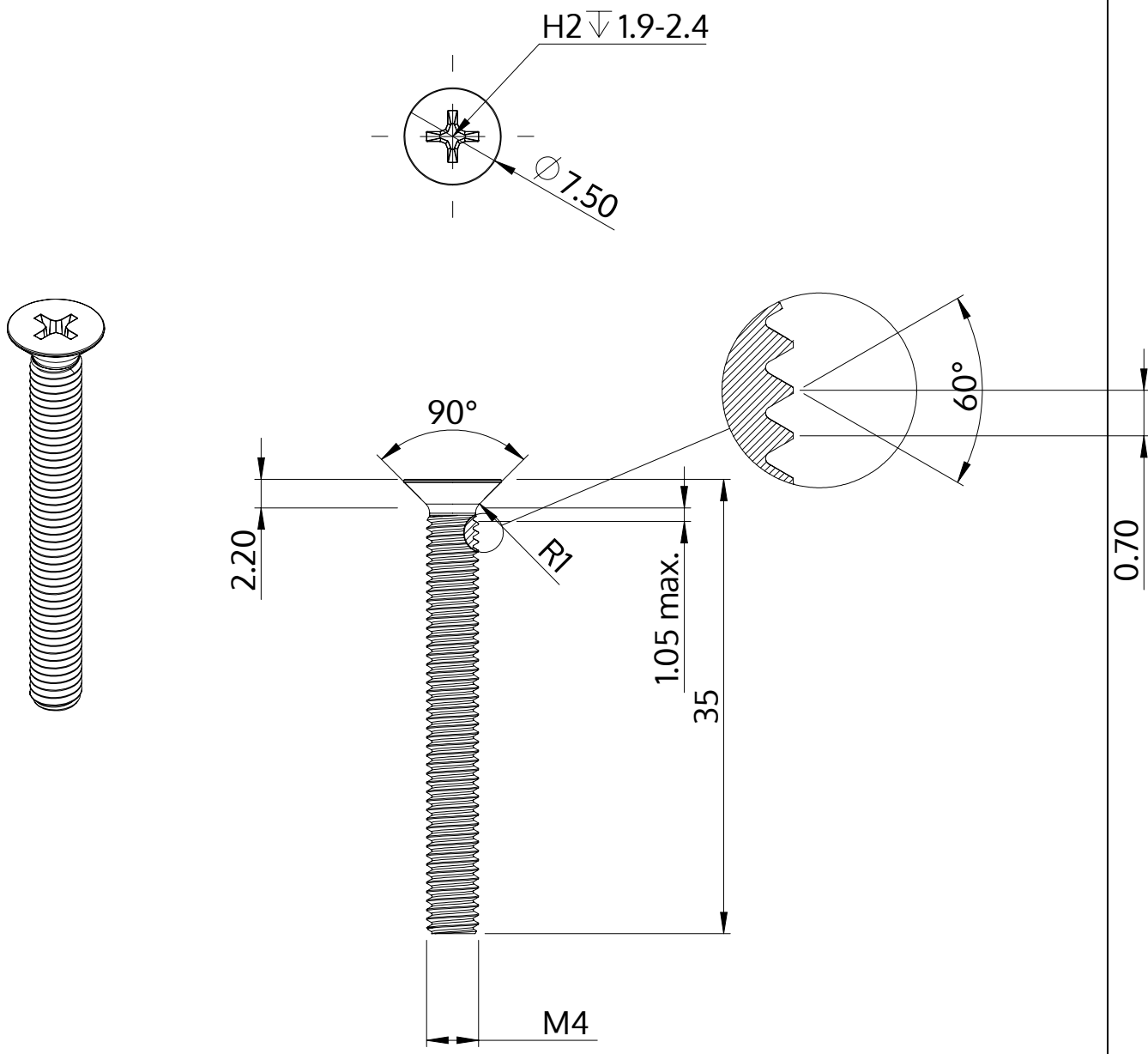


| | |
|---|---|
| Description | STM33 4.0x35.0 - H2 |
| Material | steel, hardened |
| Surface | zinc-plated 5-7 µm, baked, blue / transparent passivated |
| Weight | 2.800 kg / 1000 pieces |

| | | |
|---|---|---|
| SCREWERK | **STM330400350S** | |
| Metric Drawing A4 | Scale None:1 | 2024-04 |