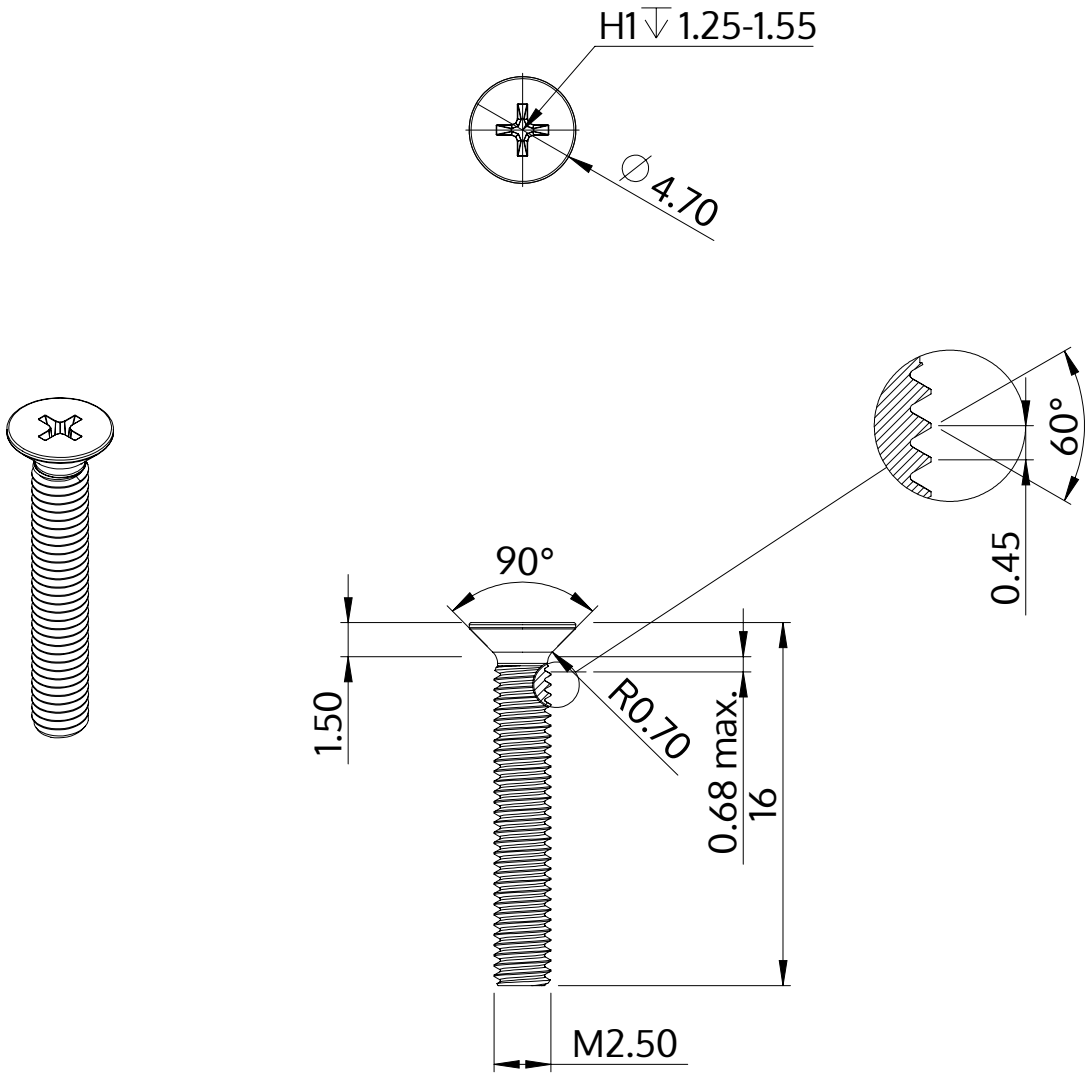

Description	STM33 2.5x16.0 - H1
Material	steel, hardened
Surface	zinc-plated 5-7 µm, baked, blue / transparent passivated
Weight	0.515 kg / 1000 pieces

SCREWERK	**STM330250160S**	
Metric Drawing A4	Scale None:1	2024-04