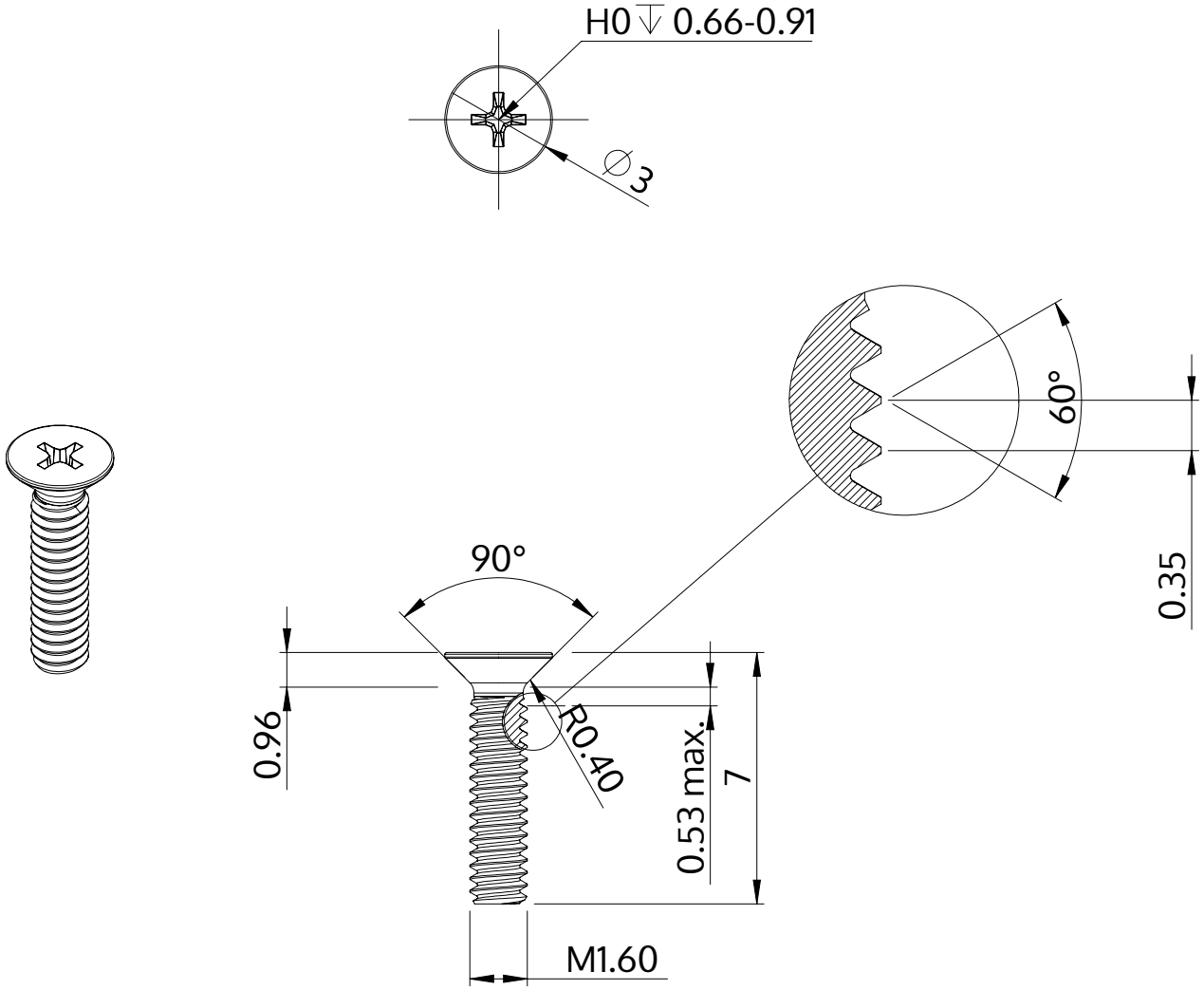


| | |
|---|---|
| Description | STM33 1.6x7.0 - H0 |
| Material | steel, hardened |
| Surface | Zinc-Nickel-plated min. 5µm, passivated black/ Cr-VI-free, baked, sealed |
| Weight | 0.097 kg / 1000 pieces |

| | | |
|---|---|---|
| SCREWERK | **STM330160070B** | |
| Metric Drawing A4 | Scale None:1 | 2024-04 |