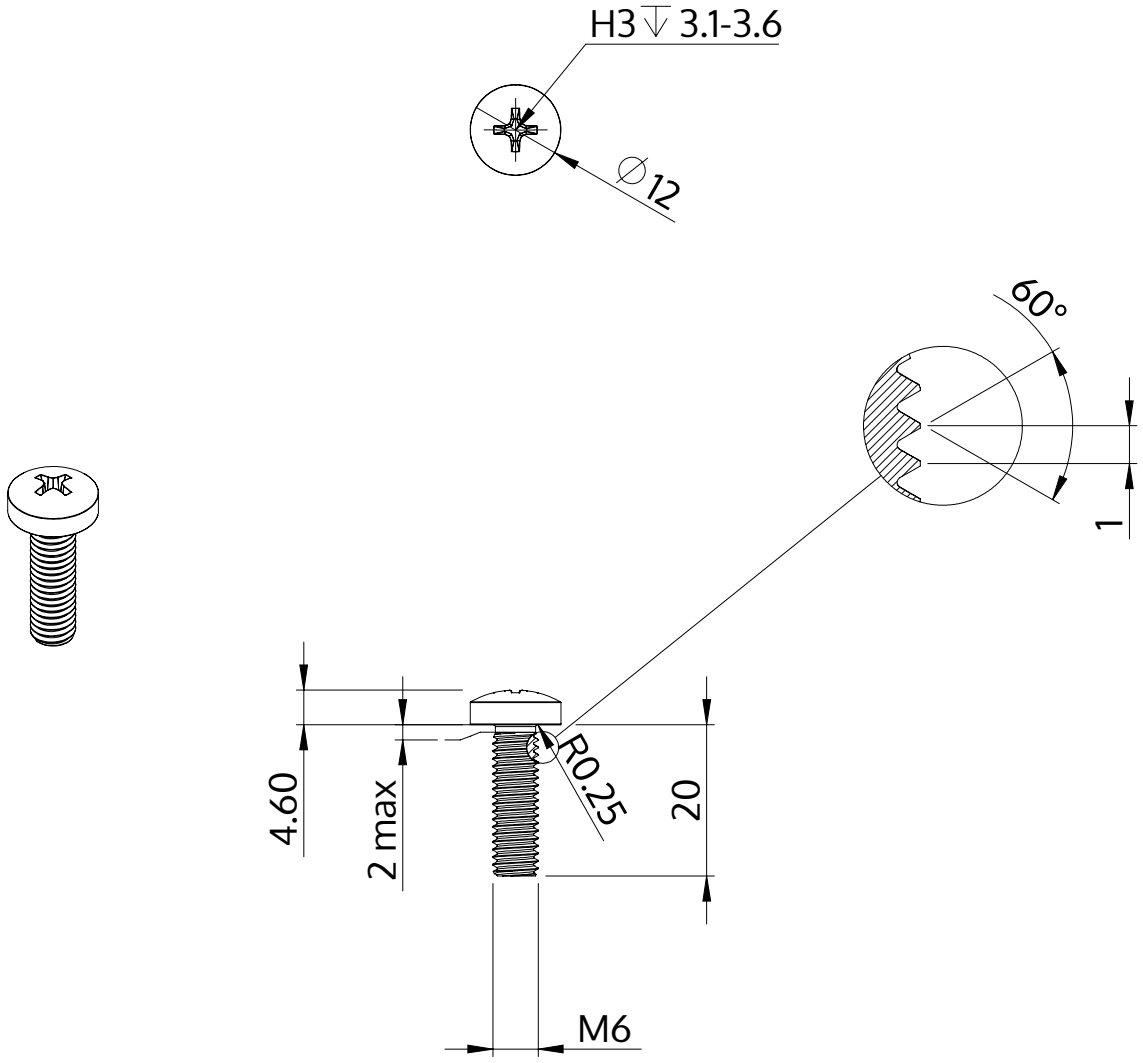

Description	STM32 6.0x20.0 - H3
Material	steel, hardened
Surface	zinc-plated 5-7 µm, baked, blue / transparent passivated
Weight	6.342 kg / 1000 pieces

SCREWERK	**STM320600200S**	
Metric Drawing A4	Scale 1:1	2024-10