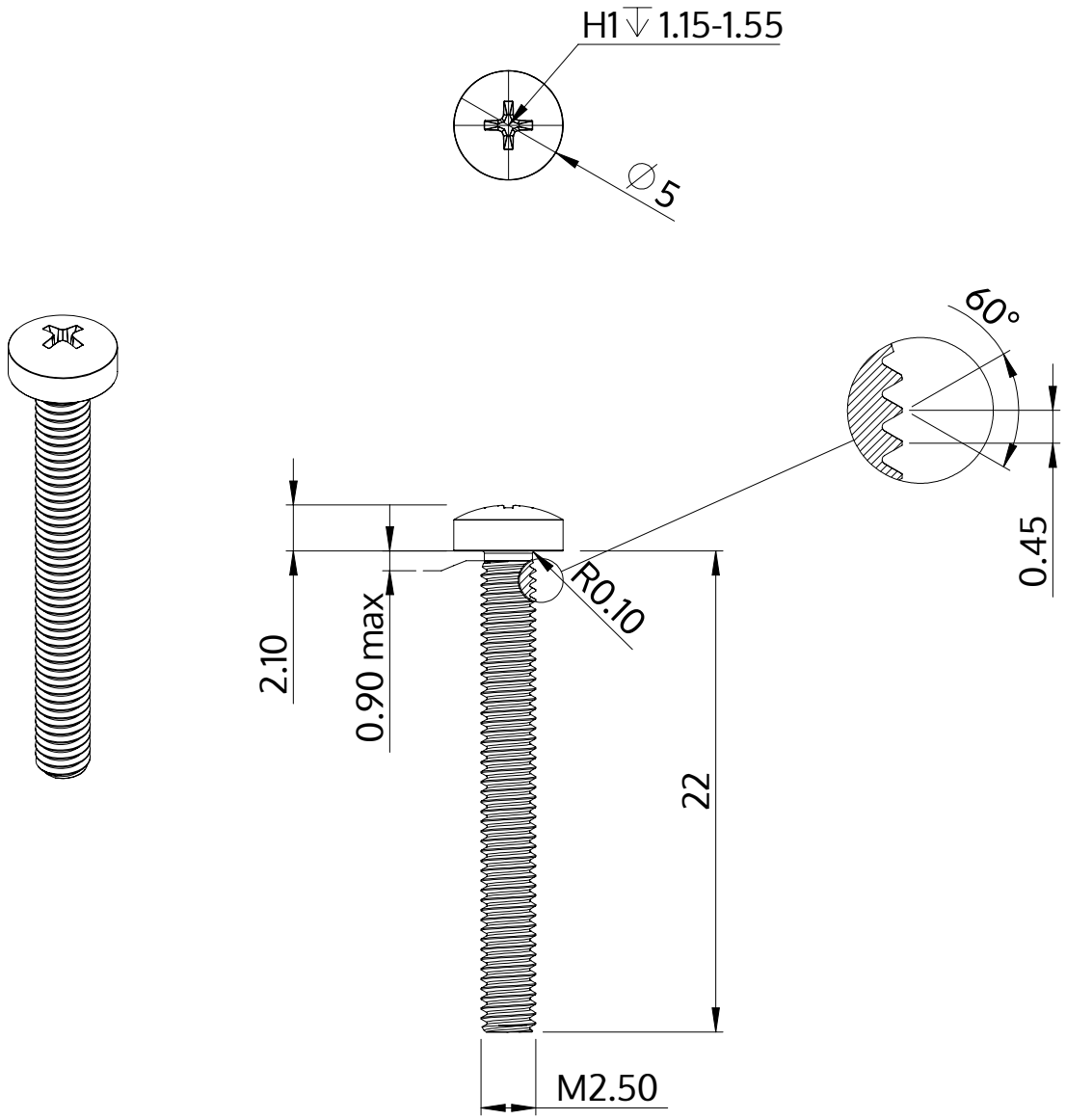

Description	STM32 2.5x22.0 - H1
Material	steel, hardened
Surface	zinc-plated 5-7 µm, baked, blue / transparent passivated
Weight	0.839 kg / 1000 pieces

SCREWERK	**STM320250220S**	
Metric Drawing A4	Scale 3:1	2024-10