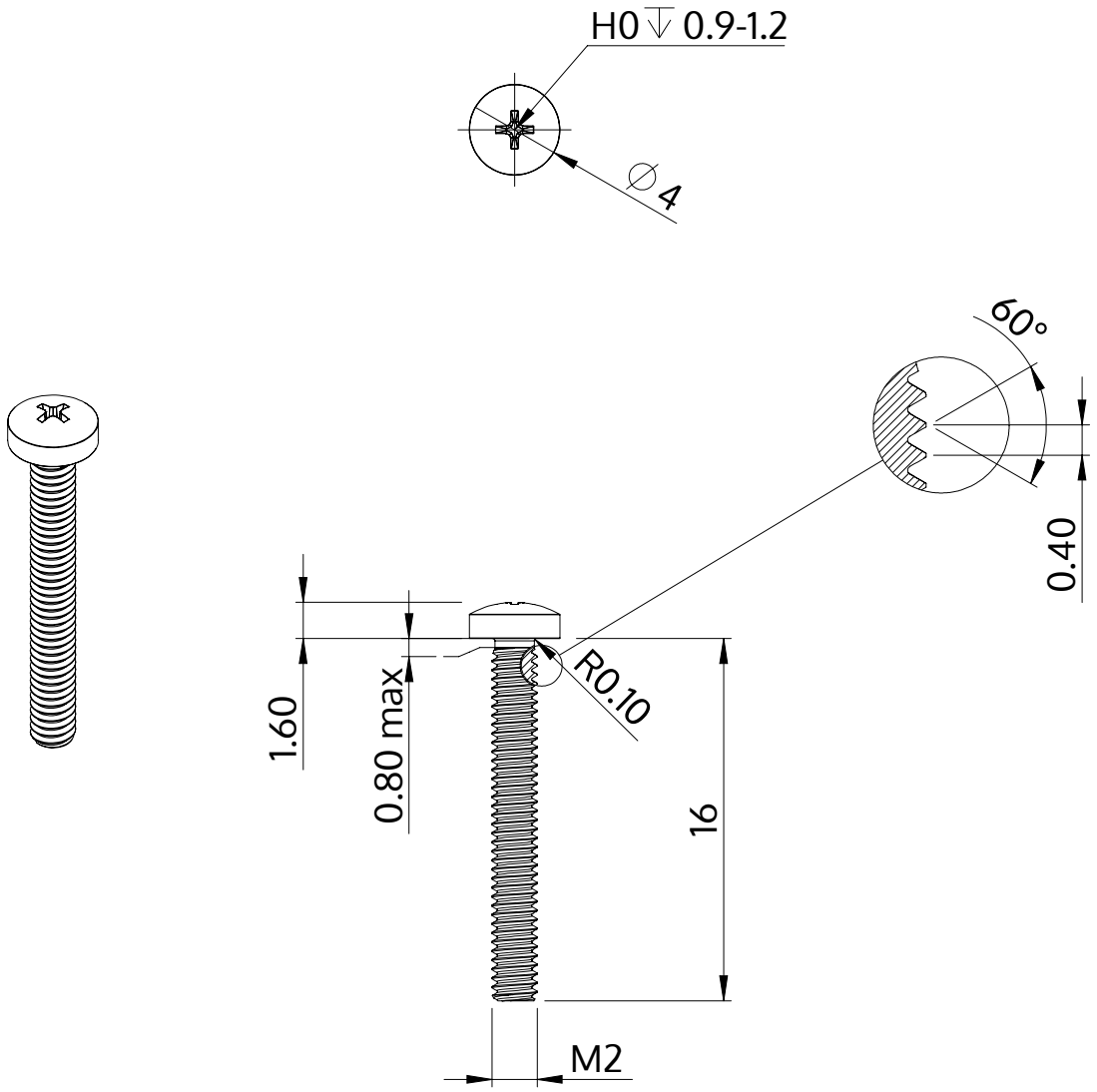

Description	STM32 2.0x16.0 - H0
Material	stainless-steel A2
Surface	bright, pickled and passivated
Weight	0.417 kg / 1000 pieces

SCREWERK	**STM320200160E**	
Metric Drawing A4	Scale 3:1	2024-10