Spec Sheet STP41A0800800S

SCREWERK

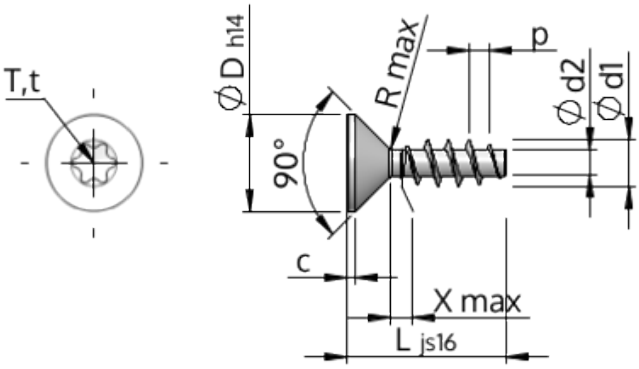

Item Number		STP41A0800800S
Standard		KN1041
Material		steel, hardened
Surface		zinc-plated 5-7 µm, baked, blue / transparent passivated
Thread Outside-Ø	**d1**	$8.00^{+0.22}$ mm
Thread Core-Ø	**d2**	4.21 mm
Thread Pitch	**p**	3.59 mm
Length	**L**	80.00 ±0.95 mm
Head-Ø	**D**	$15.80_{-0.43}$ mm
Cylindrical Head Height	**C**	0.95 mm
Thread Run-Out	**X**	4.00 mm
Radius	**R**	1.00 mm
Size Six Lobe		T40
Penetration Depth	**t**	2.40 - 2.90 mm
Thread		STS
Weight		17.660 kg / 1000 pieces
Customs Tariff No		73 181 499