Spec Sheet STP41A0600450E

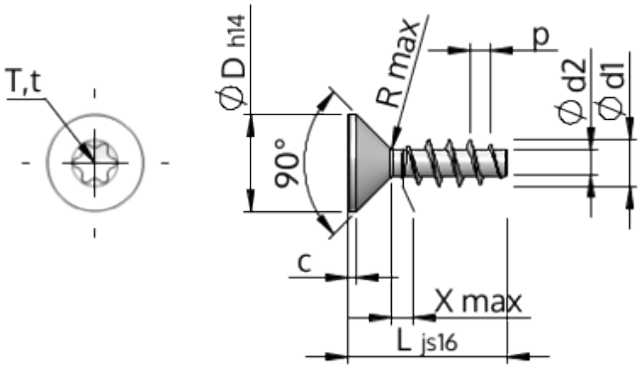

Item Number		STP41A0600450E
Standard		KN1041
Material		stainless-steel A2
Surface		bright, pickled and passivated
Thread Outside-Ø	**d1**	$6.00^{+0.18}$ mm
Thread Core-Ø	**d2**	3.19 mm
Thread Pitch	**p**	2.69 mm
Length	**L**	45.00 ±0.80 mm
Head-Ø	**D**	$11.30_{-0.43}$ mm
Cylindrical Head Height	**C**	0.85 mm
Thread Run-Out	**X**	3.00 mm
Radius	**R**	0.60 mm
Size Six Lobe		T30
Penetration Depth	**t**	1.75 - 2.20 mm
Thread		STS
Weight		5.463 kg / 1000 pieces
Customs Tariff No		73 181 410