Spec Sheet STP41A0400200B

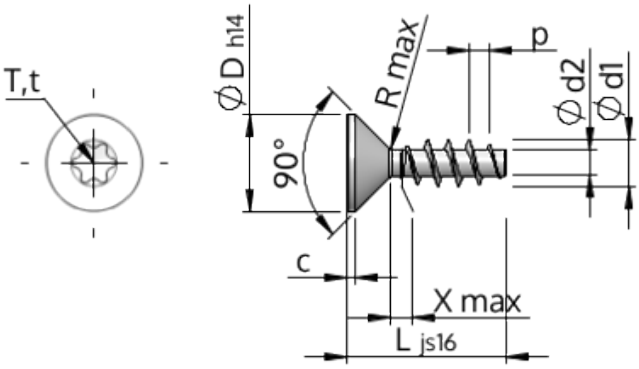

Item Number		STP41A0400200B
Standard		KN1041
Material		steel, hardened
Surface		Zinc-Nickel-plated min. 5µm, passivated black/ Cr-VI-free, baked, sealed
Thread Outside-Ø	**d1**	4.00 $^{+0.18}$ mm
Thread Core-Ø	**d2**	2.17 mm
Thread Pitch	**p**	1.79 mm
Length	**L**	20.00 ±0.65 mm
Head-Ø	**D**	8.40 $_{-0.36}$ mm
Cylindrical Head Height	**C**	0.70 mm
Thread Run-Out	**X**	2.00 mm
Radius	**R**	0.40 mm
Size Six Lobe		T20
Penetration Depth	**t**	1.25 - 1.70 mm
Thread		STS
Weight		1.415 kg / 1000 pieces
Customs Tariff No		73 181 499