Spec Sheet STP41A0350160B

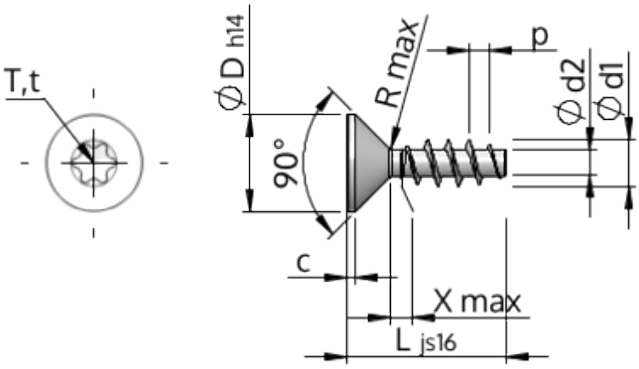

Item Number		STP41A0350160B
Standard		KN1041
Material		steel, hardened
Surface		Zinc-Nickel-plated min. 5µm, passivated black/ Cr-VI-free, baked, sealed
Thread Outside-Ø	**d1**	$3.50^{+0.18}$ mm
Thread Core-Ø	**d2**	1.91 mm
Thread Pitch	**p**	1.57 mm
Length	**L**	16.00 ±0.55 mm
Head-Ø	**D**	$7.30_{-0.36}$ mm
Cylindrical Head Height	**C**	0.65 mm
Thread Run-Out	**X**	1.80 mm
Radius	**R**	0.35 mm
Size Six Lobe		T15
Penetration Depth	**t**	1.00 - 1.30 mm
Thread		STS
Weight		0.868 kg / 1000 pieces
Customs Tariff No		73 181 499