Spec Sheet STP41A0250180E

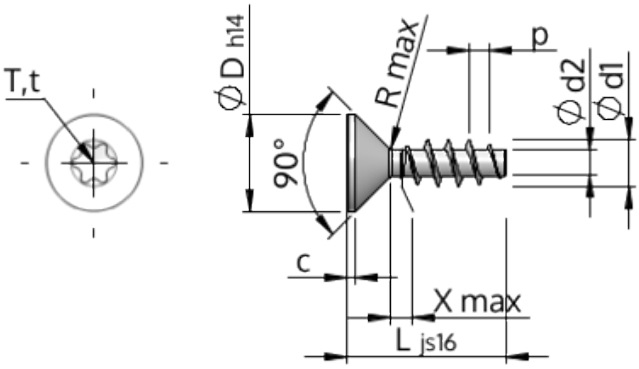

Item Number		STP41A0250180E
Standard		KN1041
Material		stainless-steel A2
Surface		bright, pickled and passivated
Thread Outside-Ø	**d1**	$2.50^{+0.14}$ mm
Thread Core-Ø	**d2**	1.40 mm
Thread Pitch	**p**	1.12 mm
Length	**L**	18.00 ±0.55 mm
Head-Ø	**D**	$4.70_{-0.30}$ mm
Cylindrical Head Height	**C**	0.55 mm
Thread Run-Out	**X**	1.30 mm
Radius	**R**	0.30 mm
Size Six Lobe		T8
Penetration Depth	**t**	0.70 - 0.90 mm
Thread		STS
Weight		0.438 kg / 1000 pieces
Customs Tariff No		73 181 410