# Spec Sheet STP41A0200070B

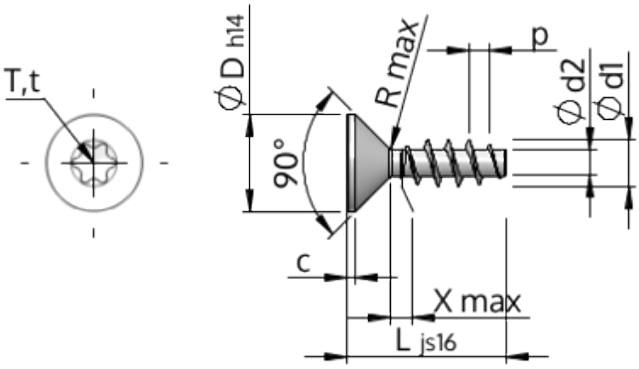


| | | |
|---|---|---|
| Item Number | | STP41A0200070B |
| Standard | | KN1041 |
| Material | | steel, hardened |
| Surface | | Zinc-Nickel-plated min. 5µm, passivated black/ Cr-VI-free, baked, sealed |
| Thread Outside-Ø | **d1** | $2.00^{+0.14}$ mm |
| Thread Core-Ø | **d2** | 1.15 mm |
| Thread Pitch | **p** | 0.89 mm |
| Length | **L** | 7.00 ±0.45 mm |
| Head-Ø | **D** | $3.80_{-0.30}$ mm |
| Cylindrical Head Height | **C** | 0.35 mm |
| Thread Run-Out | **X** | 1.00 mm |
| Radius | **R** | 0.25 mm |
| Size Six Lobe | | T6 |
| Penetration Depth | **t** | 0.50 - 0.65 mm |
| Thread | | STS |
| Weight | | 0.132 kg / 1000 pieces |
| Customs Tariff No | | 73 181 499 |