Spec Sheet STP41A0180100E

SCREWERK

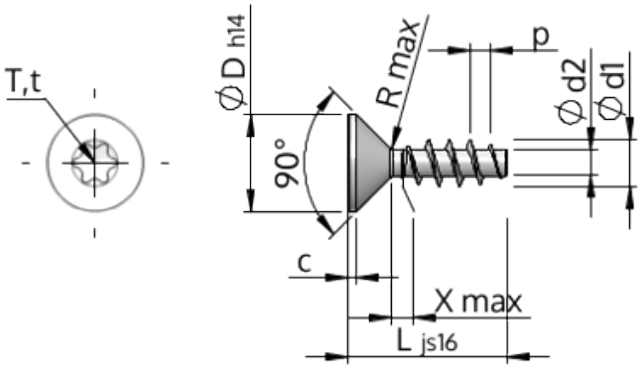

Item Number		STP41A0180100E
Standard		KN1041
Material		stainless-steel A2
Surface		bright, pickled and passivated
Thread Outside-Ø	**d1**	$1.80^{+0.14}$ mm
Thread Core-Ø	**d2**	1.04 mm
Thread Pitch	**p**	0.80 mm
Length	**L**	10.00 ± 0.45 mm
Head-Ø	**D**	$3.40_{-0.30}$ mm
Cylindrical Head Height	**C**	0.35 mm
Thread Run-Out	**X**	0.90 mm
Radius	**R**	0.20 mm
Size Six Lobe		T6
Penetration Depth	**t**	0.50 - 0.65 mm
Thread		STS
Weight		0.142 kg / 1000 pieces
Customs Tariff No		73 181 410