Spec Sheet STP380800500S

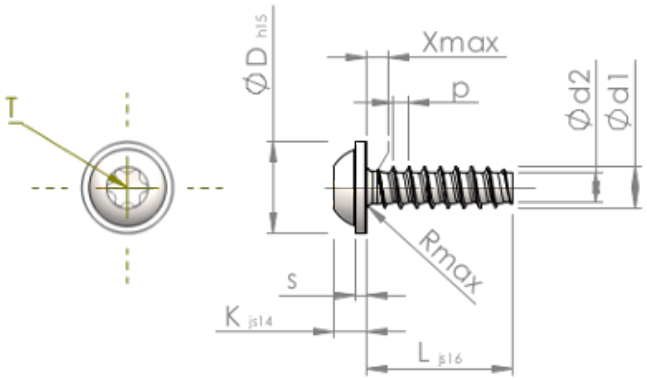

Item Number		STP380800500S
Standard		KN6038
Material		steel, hardened
Surface		zinc-plated 5-7 µm, baked, blue / transparent passivated
Thread Outside-Ø	**d1**	8.00 $^{+0.18}$ mm
Thread Core-Ø	**d2**	5.70 mm
Thread Pitch	**p**	2.82 mm
Length	**L**	50.00 ±0.80 mm
Head-Ø	**D**	18.00 $_{-0.84}$ mm
Head Height	**K**	5.600 ±0.150 mm
Flange Thickness	**S**	1.80 mm
Thread Run-Out	**X**	4.00 mm
Radius	**R**	1.00 mm
Size Six Lobe		T40
Penetration Depth	**t**	2.60 - 3.20 mm
Thread		STS-plus
Weight		17.412 kg / 1000 pieces
Customs Tariff No		73 181 499