Spec Sheet STP380700400E

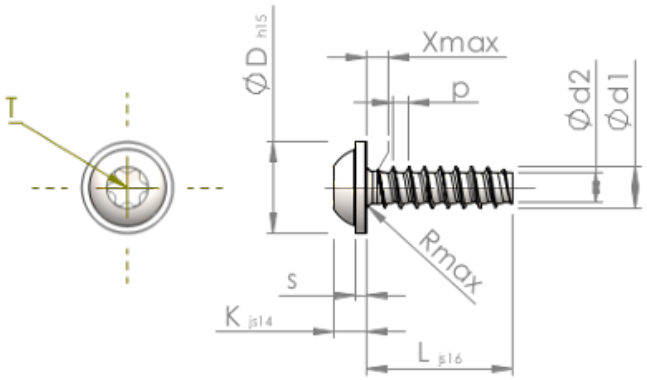

Item Number		STP380700400E
Standard		KN6038
Material		stainless-steel A2
Surface		bright, pickled and passivated
Thread Outside-Ø	**d1**	7.00 $^{+0.18}$ mm
Thread Core-Ø	**d2**	4.98 mm
Thread Pitch	**p**	2.48 mm
Length	**L**	40.00 ±0.80 mm
Head-Ø	**D**	15.50 $_{-0.70}$ mm
Head Height	**K**	4.900 ±0.150 mm
Flange Thickness	**S**	1.60 mm
Thread Run-Out	**X**	3.50 mm
Radius	**R**	0.90 mm
Size Six Lobe		T30
Penetration Depth	**t**	2.30 - 2.90 mm
Thread		STS-plus
Weight		11.364 kg / 1000 pieces
Customs Tariff No		73 181 410