# Spec Sheet STP380700200E

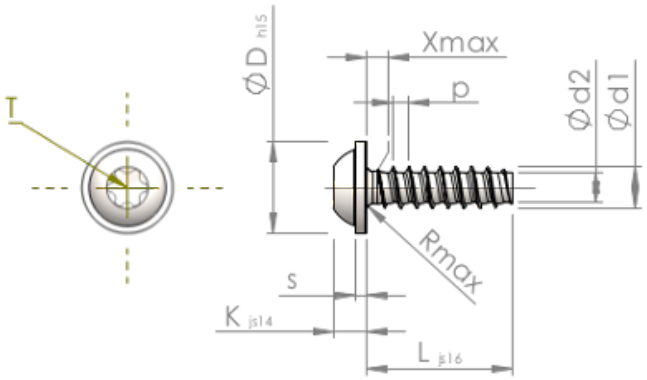


| | | |
|---|---|---|
| Item Number | | STP380700200E |
| Standard | | KN6038 |
| Material | | stainless-steel A2 |
| Surface | | bright, pickled and passivated |
| Thread Outside-Ø | **d1** | $7.00^{+0.18}$ mm |
| Thread Core-Ø | **d2** | 4.98 mm |
| Thread Pitch | **p** | 2.48 mm |
| Length | **L** | 20.00 ±0.65 mm |
| Head-Ø | **D** | $15.50_{-0.70}$ mm |
| Head Height | **K** | 4.900 ±0.150 mm |
| Flange Thickness | **S** | 1.60 mm |
| Thread Run-Out | **X** | 3.50 mm |
| Radius | **R** | 0.90 mm |
| Size Six Lobe | | T30 |
| Penetration Depth | **t** | 2.30 - 2.90 mm |
| Thread | | STS-plus |
| Weight | | 7.582 kg / 1000 pieces |
| Customs Tariff No | | 73 181 410 |