Spec Sheet STP380600250C

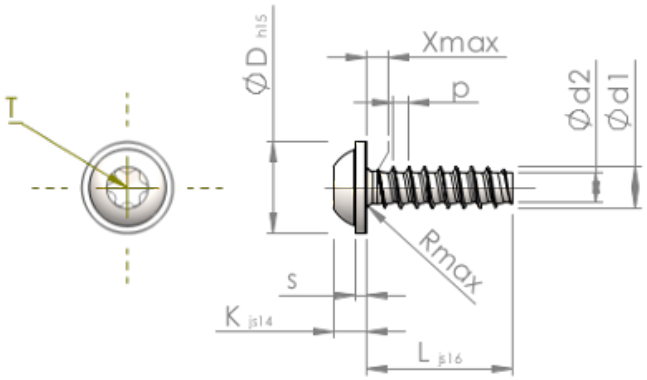

Item Number		STP380600250C
Standard		KN6038
Material		stainless steel A4
Surface		bright, pickled and passivated
Thread Outside-Ø	**d1**	$6.00^{+0.15}$ mm
Thread Core-Ø	**d2**	4.26 mm
Thread Pitch	**p**	2.14 mm
Length	**L**	25.00 ±0.65 mm
Head-Ø	**D**	$13.50_{-0.70}$ mm
Head Height	**K**	4.200 ±0.150 mm
Flange Thickness	**S**	1.40 mm
Thread Run-Out	**X**	3.00 mm
Radius	**R**	0.80 mm
Size Six Lobe		T30
Penetration Depth	**t**	1.90 - 2.40 mm
Thread		STS-plus
Weight		5.787 kg / 1000 pieces
Customs Tariff No		73 181 410