# Spec Sheet STP380600120E

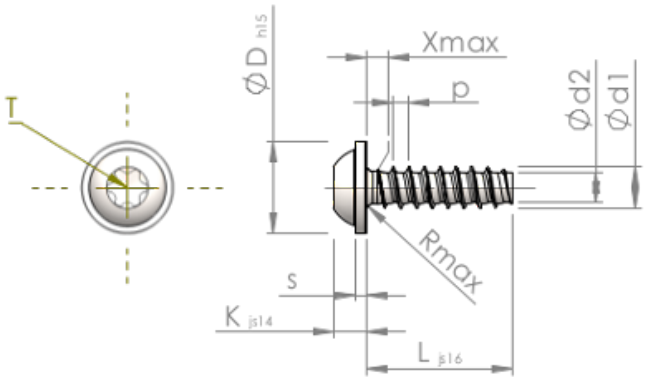


| | | |
|---|---|---|
| Item Number | | STP380600120E |
| Standard | | KN6038 |
| Material | | stainless-steel A2 |
| Surface | | bright, pickled and passivated |
| Thread Outside-Ø | **d1** | $6.00^{+0.15}$ mm |
| Thread Core-Ø | **d2** | 4.26 mm |
| Thread Pitch | **p** | 2.14 mm |
| Length | **L** | 12.00 ±0.55 mm |
| Head-Ø | **D** | $13.50_{-0.70}$ mm |
| Head Height | **K** | 4.200 ±0.150 mm |
| Flange Thickness | **S** | 1.40 mm |
| Thread Run-Out | **X** | 3.00 mm |
| Radius | **R** | 0.80 mm |
| Size Six Lobe | | T30 |
| Penetration Depth | **t** | 1.90 - 2.40 mm |
| Thread | | STS-plus |
| Weight | | 4.024 kg / 1000 pieces |
| Customs Tariff No | | 73 181 410 |