Spec Sheet STP380500550S

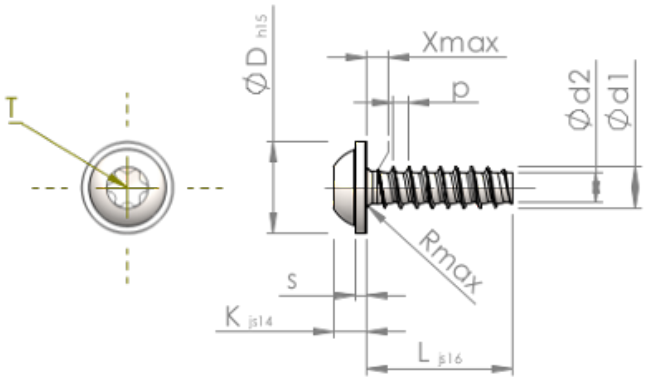

Item Number		STP380500550S
Standard		KN6038
Material		steel, hardened
Surface		zinc-plated 5-7 µm, baked, blue / transparent passivated
Thread Outside-Ø	**d1**	$5.00^{+0.15}$ mm
Thread Core-Ø	**d2**	3.53 mm
Thread Pitch	**p**	1.80 mm
Length	**L**	55.00 ±0.95 mm
Head-Ø	**D**	$11.00_{-0.70}$ mm
Head Height	**K**	3.500 ±0.150 mm
Flange Thickness	**S**	1.20 mm
Thread Run-Out	**X**	2.50 mm
Radius	**R**	0.70 mm
Size Six Lobe		T25
Penetration Depth	**t**	1.50 - 1.90 mm
Thread		STS-plus
Weight		6.593 kg / 1000 pieces
Customs Tariff No		73 181 499