Spec Sheet STP380450200B

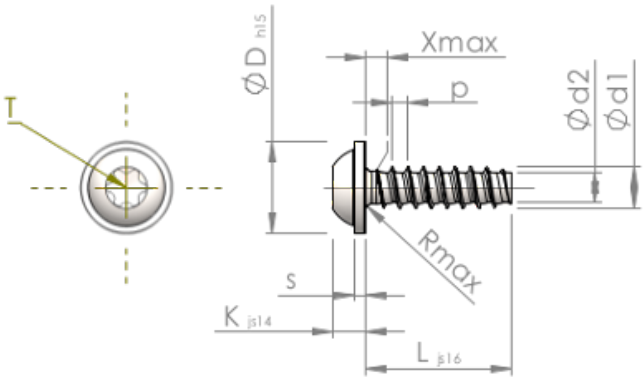

Item Number		STP380450200B
Standard		KN6038
Material		steel, hardened
Surface		Zinc-Nickel-plated min. 5µm, passivated black/ Cr-VI-free, baked, sealed
Thread Outside-Ø	**d1**	$4.50^{+0.10}$ mm
Thread Core-Ø	**d2**	3.17 mm
Thread Pitch	**p**	1.63 mm
Length	**L**	20.00 ±0.65 mm
Head-Ø	**D**	$10.00_{-0.58}$ mm
Head Height	**K**	3.200 ±0.150 mm
Flange Thickness	**S**	1.10 mm
Thread Run-Out	**X**	2.30 mm
Radius	**R**	0.60 mm
Size Six Lobe		T20
Penetration Depth	**t**	1.40 - 1.80 mm
Thread		STS-plus
Weight		2.550 kg / 1000 pieces
Customs Tariff No		73 181 499