Spec Sheet STP380400280E

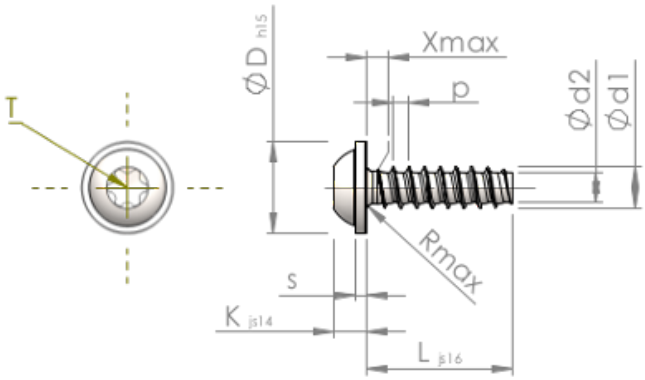

Item Number		STP380400280E
Standard		KN6038
Material		stainless-steel A2
Surface		bright, pickled and passivated
Thread Outside-Ø	**d1**	$4.00^{+0.10}$ mm
Thread Core-Ø	**d2**	2.81 mm
Thread Pitch	**p**	1.46 mm
Length	**L**	28.00 ±0.65 mm
Head-Ø	**D**	$9.00_{-0.58}$ mm
Head Height	**K**	3.100 ±0.150 mm
Flange Thickness	**S**	1.00 mm
Thread Run-Out	**X**	2.00 mm
Radius	**R**	0.60 mm
Size Six Lobe		T20
Penetration Depth	**t**	1.40 - 1.80 mm
Thread		STS-plus
Weight		2.521 kg / 1000 pieces
Customs Tariff No		73 181 410