Spec Sheet STP380350320S

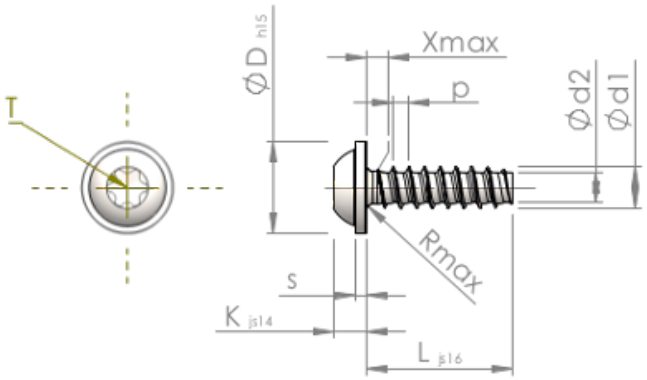

Item Number		STP380350320S
Standard		KN6038
Material		steel, hardened
Surface		zinc-plated 5-7 µm, baked, blue / transparent passivated
Thread Outside-Ø	**d1**	3.50 $^{+0.10}$ mm
Thread Core-Ø	**d2**	2.45 mm
Thread Pitch	**p**	1.29 mm
Length	**L**	32.00 ±0.80 mm
Head-Ø	**D**	7.50 $_{-0.58}$ mm
Head Height	**K**	2.700 ±0.125 mm
Flange Thickness	**S**	0.90 mm
Thread Run-Out	**X**	1.80 mm
Radius	**R**	0.50 mm
Size Six Lobe		T15
Penetration Depth	**t**	1.10 - 1.50 mm
Thread		STS-plus
Weight		1.994 kg / 1000 pieces
Customs Tariff No		73 181 499