Spec Sheet STP380350170B

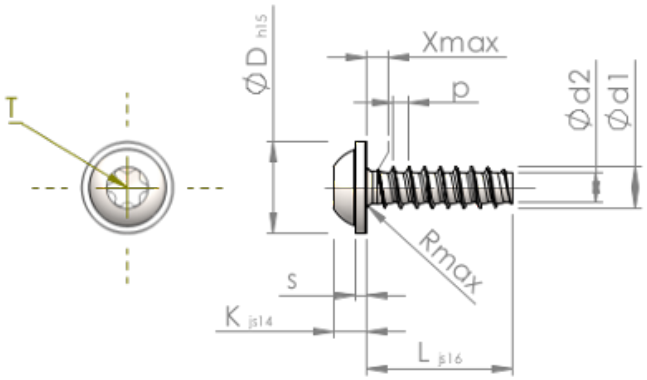

Item Number		STP380350170B
Standard		KN6038
Material		steel, hardened
Surface		Zinc-Nickel-plated min. 5µm, passivated black/ Cr-VI-free, baked, sealed
Thread Outside-Ø	**d1**	$3.50^{+0.10}$ mm
Thread Core-Ø	**d2**	2.45 mm
Thread Pitch	**p**	1.29 mm
Length	**L**	17.00 ±0.55 mm
Head-Ø	**D**	$7.50_{-0.58}$ mm
Head Height	**K**	2.700 ±0.125 mm
Flange Thickness	**S**	0.90 mm
Thread Run-Out	**X**	1.80 mm
Radius	**R**	0.50 mm
Size Six Lobe		T15
Penetration Depth	**t**	1.10 - 1.50 mm
Thread		STS-plus
Weight		1.286 kg / 1000 pieces
Customs Tariff No		73 181 499