Spec Sheet STP380300200S

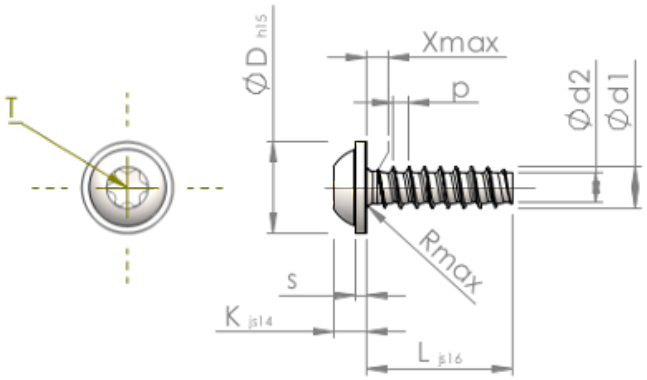

Item Number		STP380300200S
Standard		KN6038
Material		steel, hardened
Surface		zinc-plated 5-7 µm, baked, blue / transparent passivated
Thread Outside-Ø	**d1**	3.00 $^{+0.10}$ mm
Thread Core-Ø	**d2**	2.09 mm
Thread Pitch	**p**	1.12 mm
Length	**L**	20.00 ±0.65 mm
Head-Ø	**D**	6.50 $_{-0.58}$ mm
Head Height	**K**	2.300 ±0.125 mm
Flange Thickness	**S**	0.80 mm
Thread Run-Out	**X**	1.50 mm
Radius	**R**	0.50 mm
Size Six Lobe		T10
Penetration Depth	**t**	1.00 - 1.30 mm
Thread		STS-plus
Weight		0.998 kg / 1000 pieces
Customs Tariff No		73 181 499