Spec Sheet STP380250170E

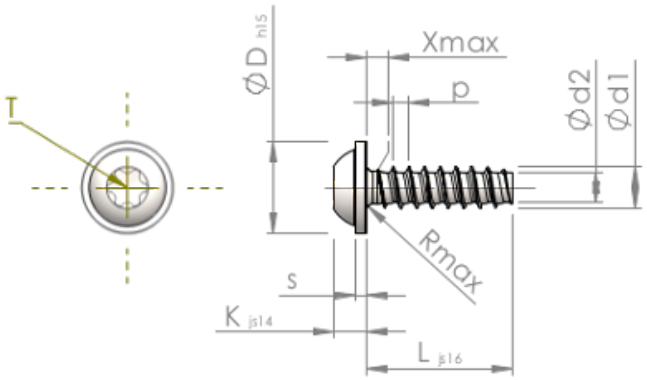

Item Number		STP380250170E
Standard		KN6038
Material		stainless-steel A2
Surface		bright, pickled and passivated
Thread Outside-Ø	**d1**	$2.50^{+0.10}$ mm
Thread Core-Ø	**d2**	1.72 mm
Thread Pitch	**p**	0.95 mm
Length	**L**	17.00 ±0.55 mm
Head-Ø	**D**	$5.50_{-0.48}$ mm
Head Height	**K**	1.900 ±0.125 mm
Flange Thickness	**S**	0.70 mm
Thread Run-Out	**X**	1.30 mm
Radius	**R**	0.40 mm
Size Six Lobe		T8
Penetration Depth	**t**	0.80 - 1.00 mm
Thread		STS-plus
Weight		0.588 kg / 1000 pieces
Customs Tariff No		73 181 410