Spec Sheet STP380200200S

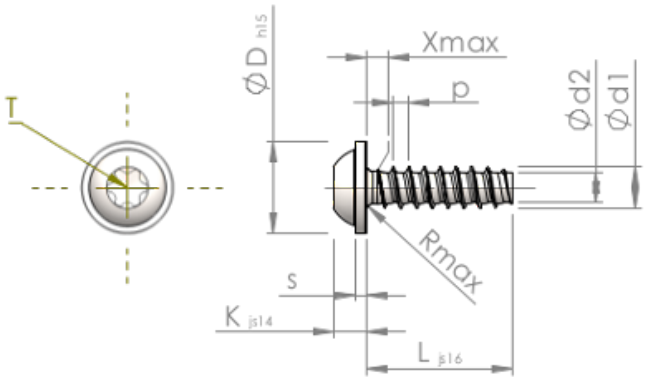

Item Number		STP380200200S
Standard		KN6038
Material		steel, hardened
Surface		zinc-plated 5-7 µm, baked, blue / transparent passivated
Thread Outside-Ø	**d1**	$2.00^{+0.08}$ mm
Thread Core-Ø	**d2**	1.36 mm
Thread Pitch	**p**	0.78 mm
Length	**L**	20.00 ±0.65 mm
Head-Ø	**D**	$4.50_{-0.48}$ mm
Head Height	**K**	1.600 ±0.125 mm
Flange Thickness	**S**	0.60 mm
Thread Run-Out	**X**	1.00 mm
Radius	**R**	0.35 mm
Size Six Lobe		T6
Penetration Depth	**t**	0.65 - 0.85 mm
Thread		STS-plus
Weight		0.414 kg / 1000 pieces
Customs Tariff No		73 181 499