Spec Sheet STP380180045B

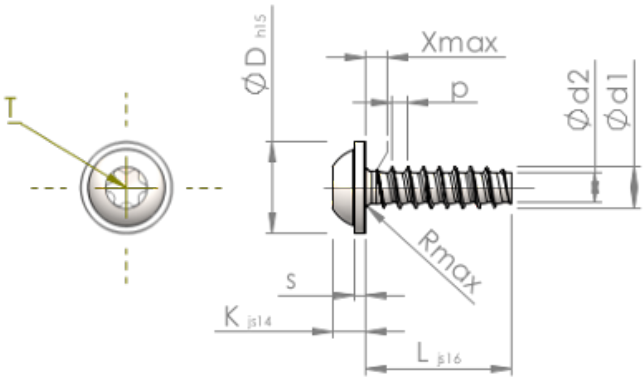

Item Number		STP380180045B
Standard		KN6038
Material		steel, hardened
Surface		Zinc-Nickel-plated min. 5µm, passivated black/ Cr-VI-free, baked, sealed
Thread Outside-Ø	**d1**	$1.80^{+0.08}$ mm
Thread Core-Ø	**d2**	1.22 mm
Thread Pitch	**p**	0.71 mm
Length	**L**	4.50 ±0.38 mm
Head-Ø	**D**	$4.00_{-0.48}$ mm
Head Height	**K**	1.350 ±0.125 mm
Flange Thickness	**S**	0.60 mm
Thread Run-Out	**X**	0.90 mm
Radius	**R**	0.25 mm
Size Six Lobe		T6
Penetration Depth	**t**	0.50 - 0.65 mm
Thread		STS-plus
Weight		0.129 kg / 1000 pieces
Customs Tariff No		73 181 499