Spec Sheet STP380160090S

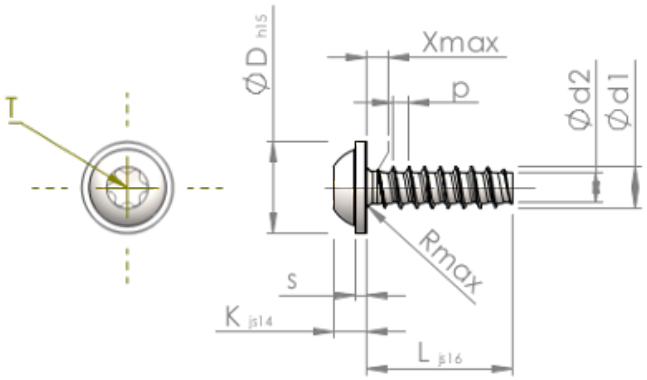

Item Number		STP380160090S
Standard		KN6038
Material		steel, hardened
Surface		zinc-plated 5-7 µm, baked, blue / transparent passivated
Thread Outside-Ø	**d1**	$1.60^{+0.08}$ mm
Thread Core-Ø	**d2**	1.07 mm
Thread Pitch	**p**	0.64 mm
Length	**L**	9.00 ±0.45 mm
Head-Ø	**D**	$3.60_{-0.48}$ mm
Head Height	**K**	1.200 ±0.125 mm
Flange Thickness	**S**	0.60 mm
Thread Run-Out	**X**	0.80 mm
Radius	**R**	0.25 mm
Size Six Lobe		T5
Penetration Depth	**t**	0.50 - 0.65 mm
Thread		STS-plus
Weight		0.143 kg / 1000 pieces
Customs Tariff No		73 181 499