# Spec Sheet STP33A0500400S

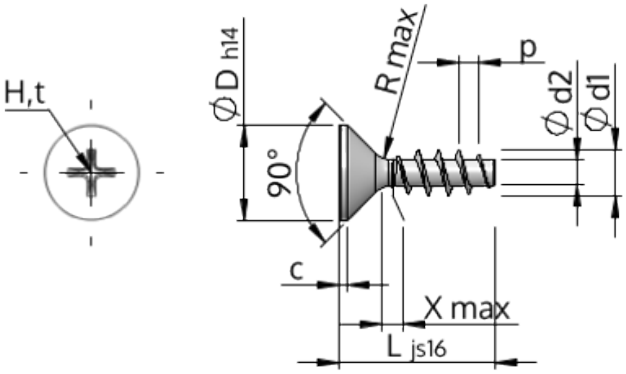


| | | |
|---|---|---|
| Item Number | | STP33A0500400S |
| Standard | | KN1033 |
| Material | | steel, hardened |
| Surface | | zinc-plated 5-7 µm, baked, blue / transparent passivated |
| Thread Outside-Ø | **d1** | $5.00^{+0.18}$ mm |
| Thread Core-Ø | **d2** | 2.68 mm |
| Thread Pitch | **p** | 2.24 mm |
| Length | **L** | 40.00 ±0.80 mm |
| Head-Ø | **D** | $9.30_{-0.36}$ mm |
| Cylindrical Head Height | **C** | 0.75 mm |
| Thread Run-Out | **X** | 2.50 mm |
| Radius | **R** | 0.45 mm |
| Size Cross Recess | | H2 |
| Penetration Depth | **t** | 2.04 - 2.67 mm |
| Thread | | STS |
| Weight | | 3.486 kg / 1000 pieces |
| Customs Tariff No | | 73 181 499 |