Spec Sheet STP33A0400220E

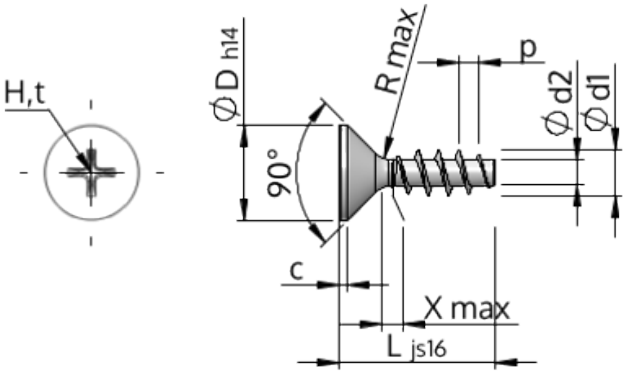

Item Number		STP33A0400220E
Standard		KN1033
Material		stainless-steel A2
Surface		bright, pickled and passivated
Thread Outside-Ø	**d1**	$4.00^{+0.18}$ mm
Thread Core-Ø	**d2**	2.17 mm
Thread Pitch	**p**	1.79 mm
Length	**L**	22.00 ±0.65 mm
Head-Ø	**D**	$8.40_{-0.36}$ mm
Cylindrical Head Height	**C**	0.70 mm
Thread Run-Out	**X**	2.00 mm
Radius	**R**	0.40 mm
Size Cross Recess		H2
Penetration Depth	**t**	1.59 - 2.22 mm
Thread		STS
Weight		1.529 kg / 1000 pieces
Customs Tariff No		73 181 410