Spec Sheet STP33A0350220S

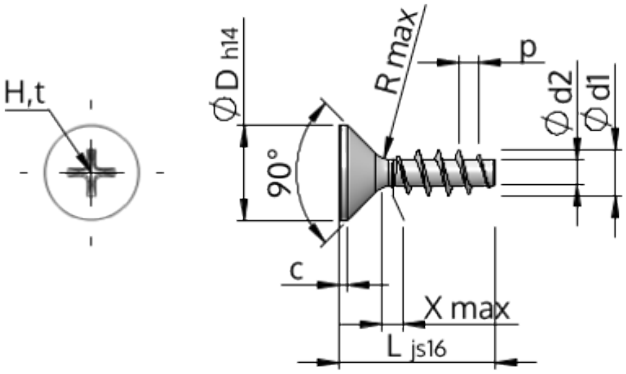

Item Number		STP33A0350220S
Standard		KN1033
Material		steel, hardened
Surface		zinc-plated 5-7 µm, baked, blue / transparent passivated
Thread Outside-Ø	**d1**	$3.50^{+0.18}$ mm
Thread Core-Ø	**d2**	1.91 mm
Thread Pitch	**p**	1.57 mm
Length	**L**	22.00 ±0.65 mm
Head-Ø	**D**	$7.30_{-0.36}$ mm
Cylindrical Head Height	**C**	0.55 mm
Thread Run-Out	**X**	1.80 mm
Radius	**R**	0.35 mm
Size Cross Recess		H2
Penetration Depth	**t**	1.33 - 1.96 mm
Thread		STS
Weight		1.089 kg / 1000 pieces
Customs Tariff No		73 181 499