Spec Sheet STP33A0300180S

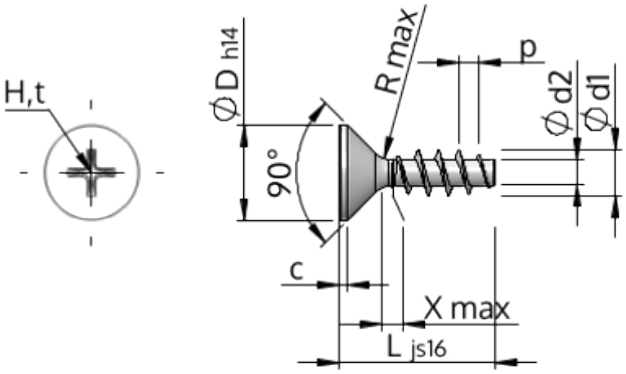

Item Number		STP33A0300180S
Standard		KN1033
Material		steel, hardened
Surface		zinc-plated 5-7 µm, baked, blue / transparent passivated
Thread Outside-Ø	**d1**	$3.00^{+0.14}$ mm
Thread Core-Ø	**d2**	1.66 mm
Thread Pitch	**p**	1.34 mm
Length	**L**	18.00 ±0.55 mm
Head-Ø	**D**	$5.50_{-0.30}$ mm
Cylindrical Head Height	**C**	0.55 mm
Thread Run-Out	**X**	1.50 mm
Radius	**R**	0.35 mm
Size Cross Recess		H1
Penetration Depth	**t**	1.10 - 1.56 mm
Thread		STS
Weight		0.615 kg / 1000 pieces
Customs Tariff No		73 181 499