Spec Sheet STP33A0220160E

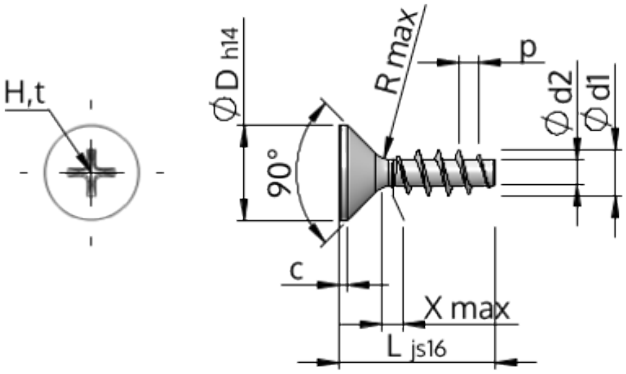

Item Number		STP33A0220160E
Standard		KN1033
Material		stainless-steel A2
Surface		bright, pickled and passivated
Thread Outside-Ø	**d1**	$2.20^{+0.14}$ mm
Thread Core-Ø	**d2**	1.25 mm
Thread Pitch	**p**	0.98 mm
Length	**L**	16.00 ±0.55 mm
Head-Ø	**D**	$3.80_{-0.30}$ mm
Cylindrical Head Height	**C**	0.35 mm
Thread Run-Out	**X**	1.10 mm
Radius	**R**	0.25 mm
Size Cross Recess		H1
Penetration Depth	**t**	0.95 - 1.25 mm
Thread		STS
Weight		0.285 kg / 1000 pieces
Customs Tariff No		73 181 410