Spec Sheet STP23A0600500S

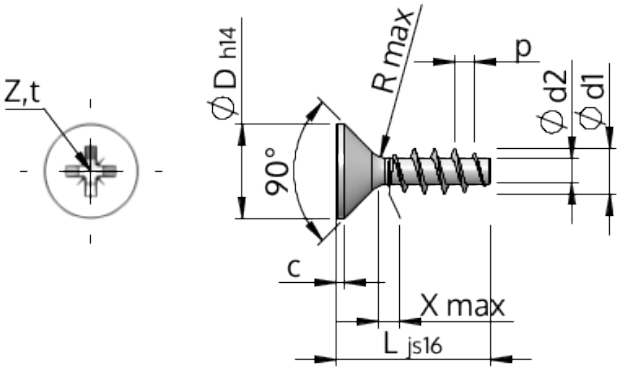

Item Number		STP23A0600500S
Standard		KN1033
Material		steel, hardened
Surface		zinc-plated 5-7 µm, baked, blue / transparent passivated
Thread Outside-Ø	**d1**	$6.00^{+0.18}$ mm
Thread Core-Ø	**d2**	3.19 mm
Thread Pitch	**p**	2.69 mm
Length	**L**	50.00 ±0.80 mm
Head-Ø	**D**	$11.30_{-0.43}$ mm
Cylindrical Head Height	**C**	0.55 mm
Thread Run-Out	**X**	3.00 mm
Radius	**R**	0.60 mm
Size Cross Recess		Z2
Penetration Depth	**t**	2.60 - 3.06 mm
Thread		STS
Weight		6.238 kg / 1000 pieces
Customs Tariff No		73 181 499