Spec Sheet STP23A0500220E

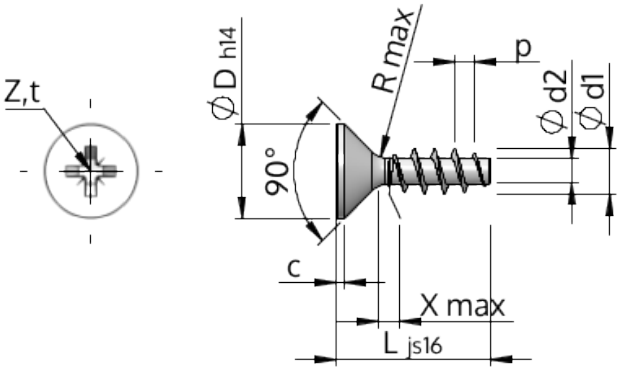

Item Number		STP23A0500220E
Standard		KN1033
Material		stainless-steel A2
Surface		bright, pickled and passivated
Thread Outside-Ø	**d1**	$5.00^{+0.18}$ mm
Thread Core-Ø	**d2**	2.68 mm
Thread Pitch	**p**	2.24 mm
Length	**L**	22.00 ±0.65 mm
Head-Ø	**D**	$9.30_{-0.36}$ mm
Cylindrical Head Height	**C**	0.50 mm
Thread Run-Out	**X**	2.50 mm
Radius	**R**	0.45 mm
Size Cross Recess		Z2
Penetration Depth	**t**	2.06 - 2.52 mm
Thread		STS
Weight		2.093 kg / 1000 pieces
Customs Tariff No		73 181 410