Spec Sheet STP23A0250140E

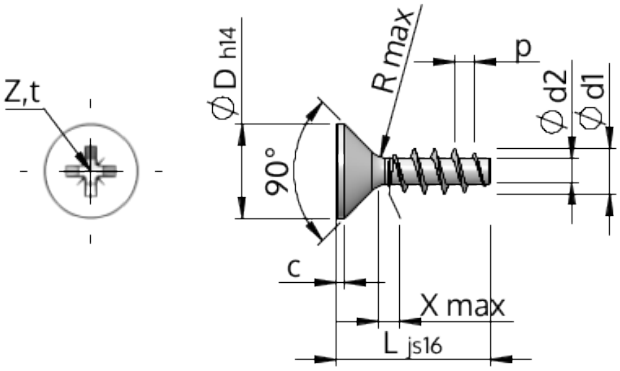

Item Number		STP23A0250140E
Standard		KN1033
Material		stainless-steel A2
Surface		bright, pickled and passivated
Thread Outside-Ø	**d1**	$2.50^{+0.14}$ mm
Thread Core-Ø	**d2**	1.40 mm
Thread Pitch	**p**	1.12 mm
Length	**L**	14.00 ±0.55 mm
Head-Ø	**D**	$4.70_{-0.30}$ mm
Cylindrical Head Height	**C**	0.35 mm
Thread Run-Out	**X**	1.30 mm
Radius	**R**	0.30 mm
Size Cross Recess		Z1
Penetration Depth	**t**	1.09 - 1.34 mm
Thread		STS
Weight		0.344 kg / 1000 pieces
Customs Tariff No		73 181 410