# Spec Sheet STP23A0250080S

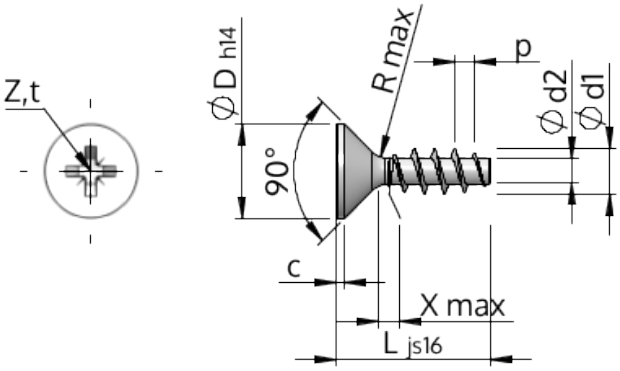


| | | |
|---|---|---|
| Item Number | | STP23A0250080S |
| Standard | | KN1033 |
| Material | | steel, hardened |
| Surface | | zinc-plated 5-7 µm, baked, blue / transparent passivated |
| Thread Outside-Ø | **d1** | $2.50^{+0.14}$ mm |
| Thread Core-Ø | **d2** | 1.40 mm |
| Thread Pitch | **p** | 1.12 mm |
| Length | **L** | 8.00 ±0.45 mm |
| Head-Ø | **D** | $4.70_{-0.30}$ mm |
| Cylindrical Head Height | **C** | 0.35 mm |
| Thread Run-Out | **X** | 1.30 mm |
| Radius | **R** | 0.30 mm |
| Size Cross Recess | | Z1 |
| Penetration Depth | **t** | 1.09 - 1.34 mm |
| Thread | | STS |
| Weight | | 0.221 kg / 1000 pieces |
| Customs Tariff No | | 73 181 499 |