Spec Sheet STP23A0200220S

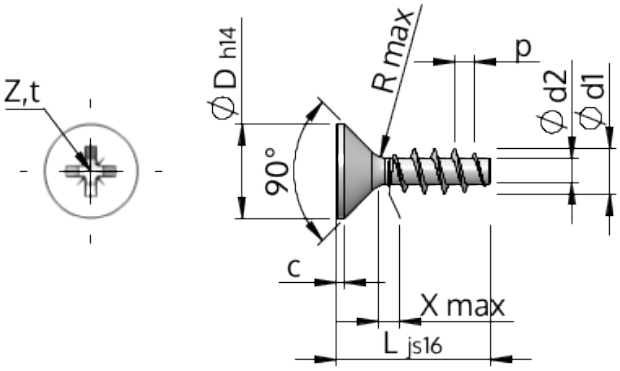

Item Number		STP23A0200220S
Standard		KN1033
Material		steel, hardened
Surface		zinc-plated 5-7 µm, baked, blue / transparent passivated
Thread Outside-Ø	**d1**	$2.00^{+0.14}$ mm
Thread Core-Ø	**d2**	1.15 mm
Thread Pitch	**p**	0.89 mm
Length	**L**	22.00 ±0.65 mm
Head-Ø	**D**	$3.80_{-0.30}$ mm
Cylindrical Head Height	**C**	0.35 mm
Thread Run-Out	**X**	1.00 mm
Radius	**R**	0.25 mm
Size Cross Recess		Z1
Penetration Depth	**t**	0.92 - 1.17 mm
Thread		STS
Weight		0.366 kg / 1000 pieces
Customs Tariff No		73 181 499