Spec Sheet STM410400550S

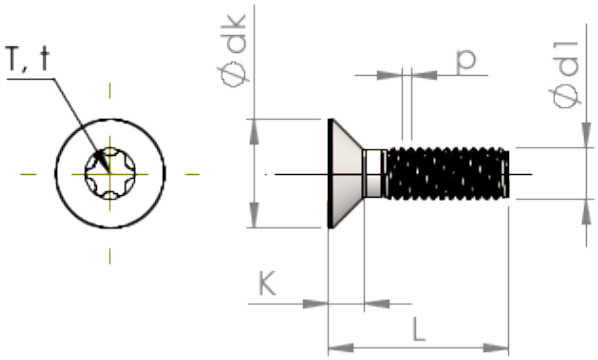

Item Number		STM410400550S
Standard		ISO 14581
Material		steel, hardened
Surface		zinc-plated 5-7 µm, baked, blue / transparent passivated
Thread Outside-Ø	**d1**	4.00 mm
Thread Pitch	**p**	0.70 mm
Length	**L**	55.00 ±0.95 mm
Head-Ø	**D**	8.40 $_{-0.36}$ mm
Cylindrical Head Height	**C**	0.70 mm
Size Six Lobe		T20
Penetration Depth	**t**	1.14 - 1.53 mm
Weight		4.346 kg / 1000 pieces
Customs Tariff No		73 181 595